CSC 2229 – Software-Defined Networking

Handout # 2:
Course Logistics and Introduction

Professor Yashar Ganjali

Department of Computer Science

University of Toronto

yganjali@cs.toronto.edu

http://www.cs.toronto.edu/~yganjali

Today

- Outline
  - What this course is about
- Logistics
  - Course structure, evaluation
  - What is expected from you
  - What you want to know
- Overview
  - Packet switching systems
  - Software-Defined Networking

CSC229: Software-Defined Networking

- Graduate level course
  - Introduction to Software-Defined Networking (SDN)
  - SDN challenges and opportunities
- Course components
  - Lectures
  - Research papers
  - Research project
- Theory + Practice
  - Switching systems are simple enough for us to prove something about them
  - Yet they are complex enough to work in practice

Outline – Part I

- Introduction
  - Packet switch systems
  - Evolution of the Internet, and Internet routers
  - Basic architectural components
  - Some example architectures
- Software-Defined Networking
  - Innovation in computer networks
  - Control vs. data plane

Outline – Part II

- SDN Challenges and Opportunities
  - Controller and switch design
  - Reliability, efficiency, and scalability
  - Architecture
  - Programming, correctness, and debugging
  - SDN security
  - New abstractions, state management
  - Network services
  - Network function virtualization
  - Network optimization

Logistics

- Class location: moved to BA5205 starting the 2nd week
- Office hours
  - Mon. 12 PM - 1 PM, BA5238
  - Or by appointment
- Course web page
  - http://www.cs.toronto.edu/~yganjali/courses/csc2229/
  - Please check regularly for announcements.
- Class mailing list
  - Based on e-mail address you provide in class.
  - Send me an e-mail if you don't receive a welcome message from that list by the end of today.
  - Please post (course-related!) questions to this list.

Logistics

- Prerequisites
  - Any introductory course on networking
  - Algorithms
  - Basic probability theory

- Papers
  - Will be listed on class web page
  - Please read suggested papers BEFORE class

Logistics

- Grading
  - Active participation in class and discussions: 10%
  - Paper presentations: 30%
  - Final project: 60%
    - Proposal: 5% - 1-2 pages
    - Intermediate report: 10% - 3 pages
    - Presentation: 15% - Last week of classes
    - Final report: 30% - 6 pages
- Deadlines
  - 5% deduction for each day of delay, up to 4 days.
  - Exception: final report deadline is hard.

Logistics

- Final Project
  - Groups of three students
  - Project topic
    - Choose from the offered list; or
    - Talk to me and define your own

Logistics

- Academic Integrity
  - All submissions must present original, independent work.
  - We take academic offenses very seriously.
  - Please read
    - "Guideline for avoiding plagiarism"

    http://www.cs.toronto.edu/~fpitt/documents/plagiarism.html
    - "Advice about academic offenses"

    http://www.cs.toronto.edu/~clarke/acoffences/

Logistics

- Accessibility Needs
  - The University of Toronto is committed to accessibility. If you require accommodations or have any accessibility concerns, please visit http://studentlife.utoronto.ca/accessibility as soon as possible.

Acknowledgements

- Special thanks to:
  - Prof. Nick McKeown, Stanford University
  - Prof. Balaji Prabhakar, Stanford University
  - Prof. Jennifer Rexford, Princeton University
  - Prof. Nick Feamster, University of Chicago

Questions?

What else do you like to know about this course?

Introduction to Packet Switching

- Background
  - What is a router?
  - Router architecture
- Packet processing in routers
  - IP address lookup
  - Packet buffering
  - Switching
- Router architectures
  - The evolution
  - Software-Defined Networking

What is Routing?

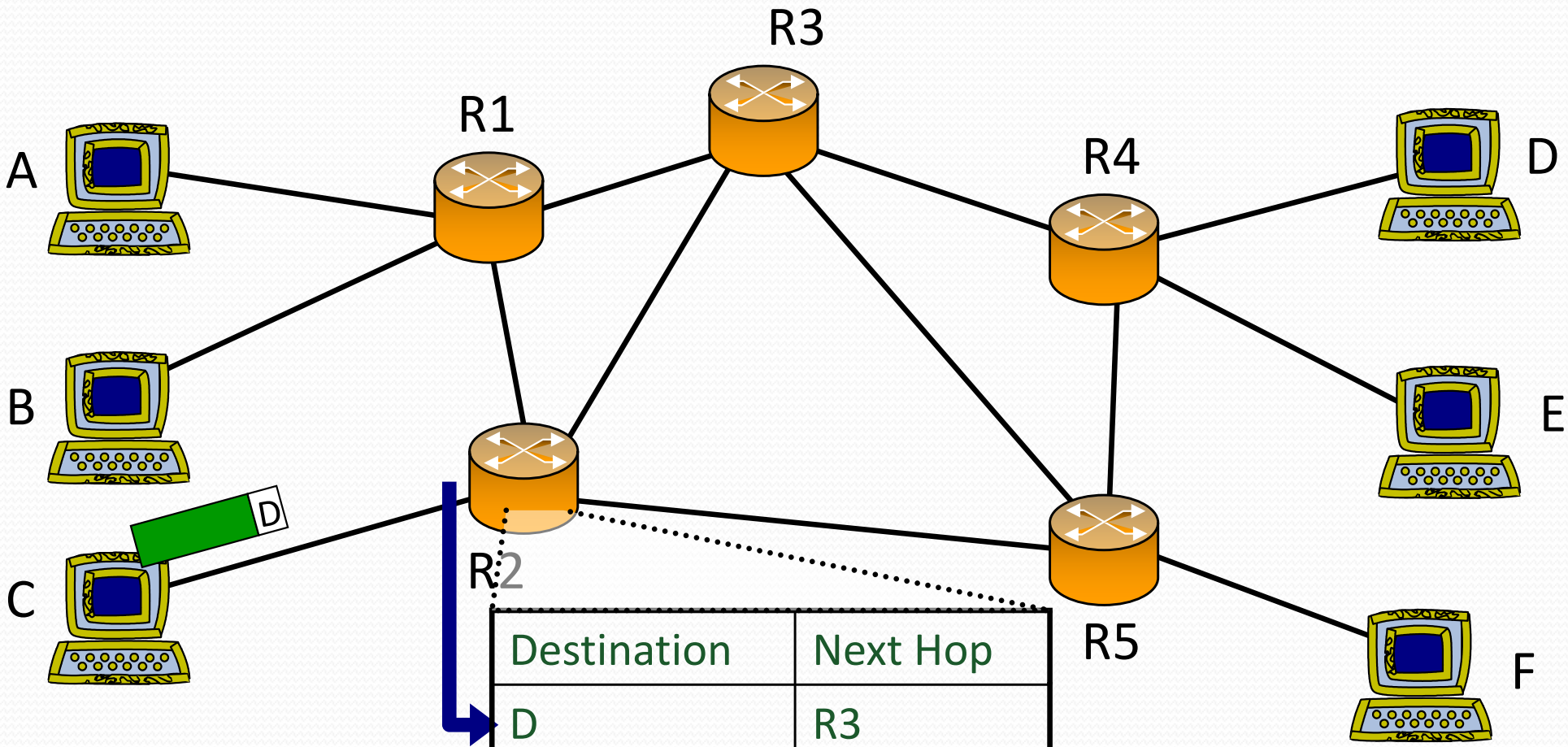

Destination	Next Hop
D	R3
E	R3
F	R5

What is Routing?

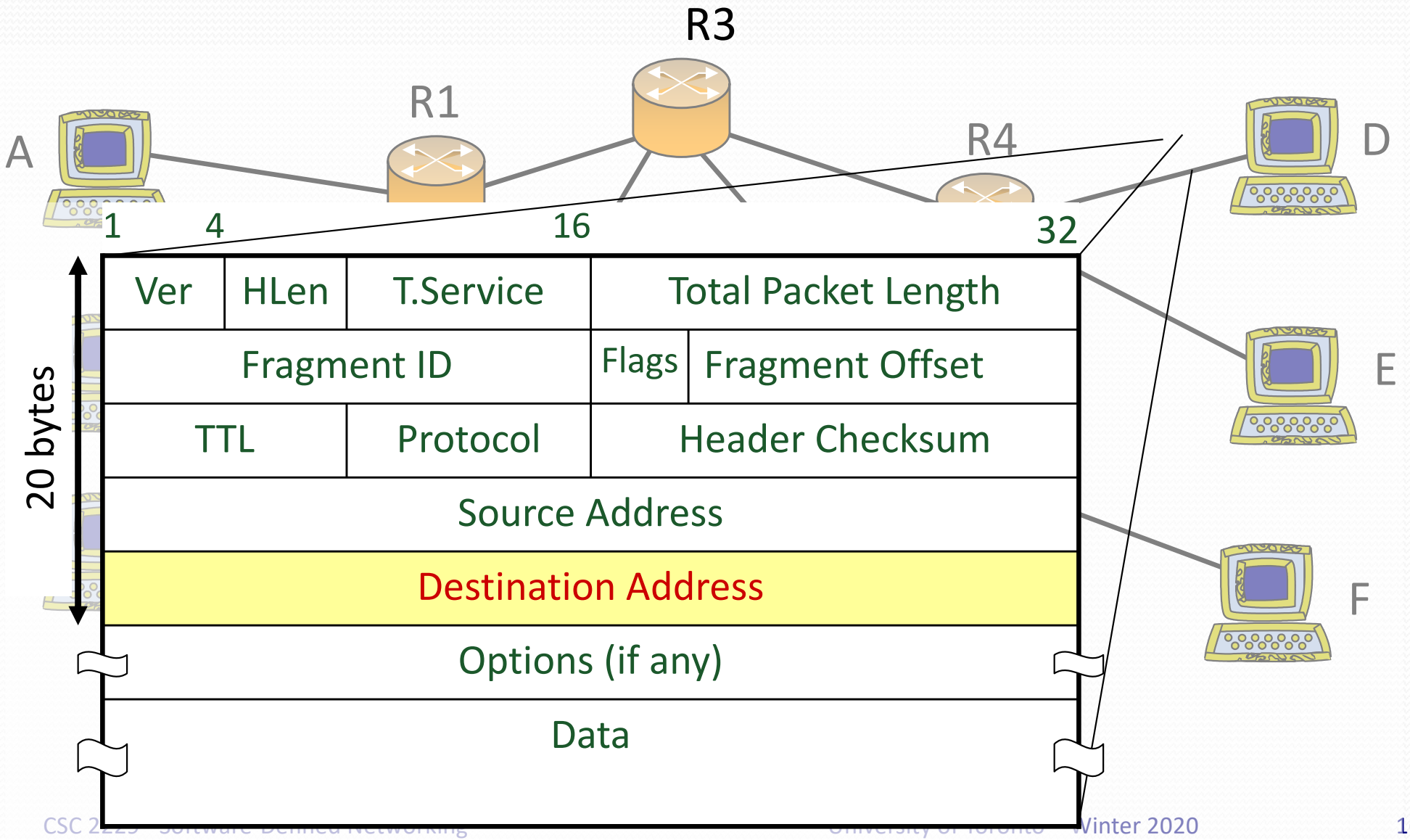

What is Routing?

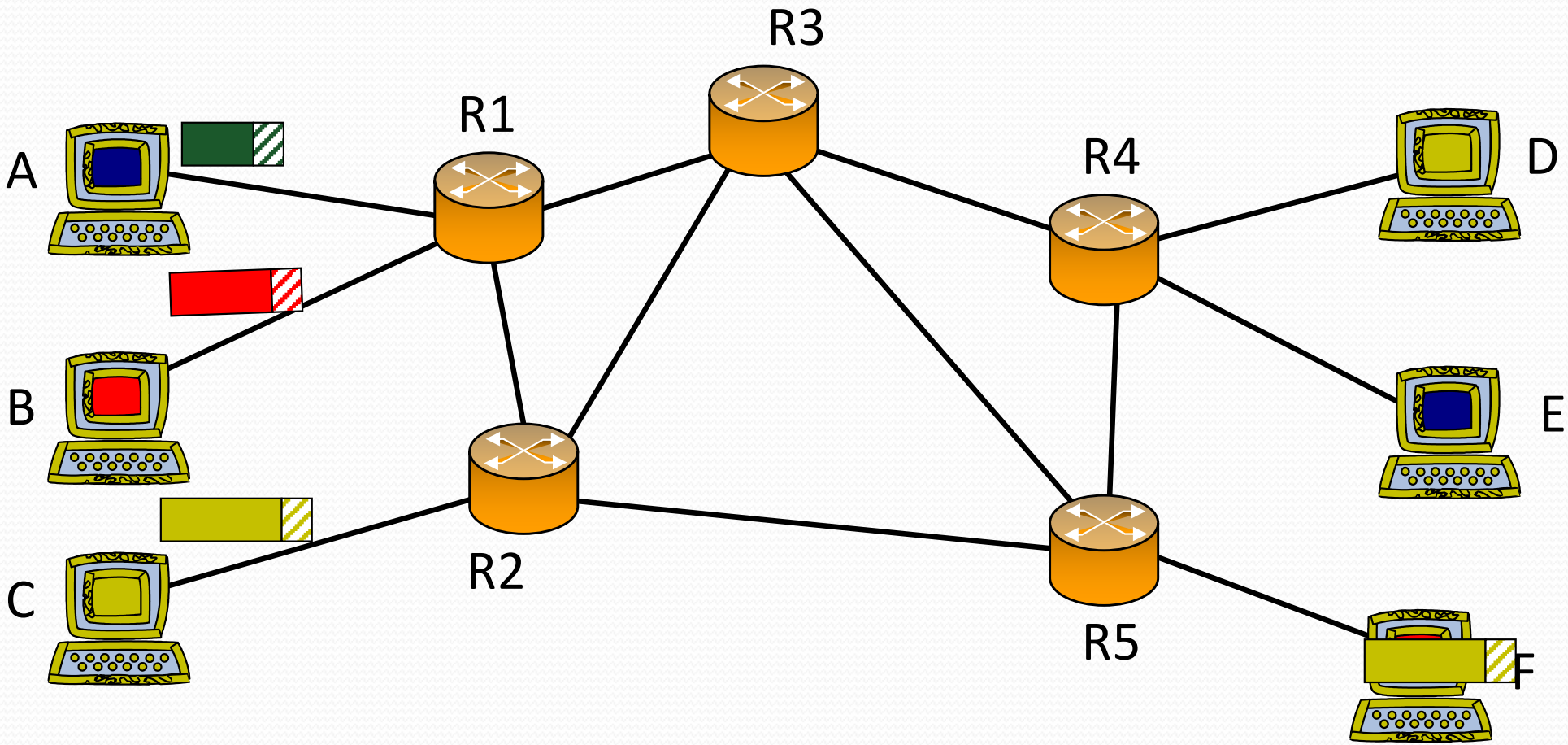

Points of Presence (POPs)

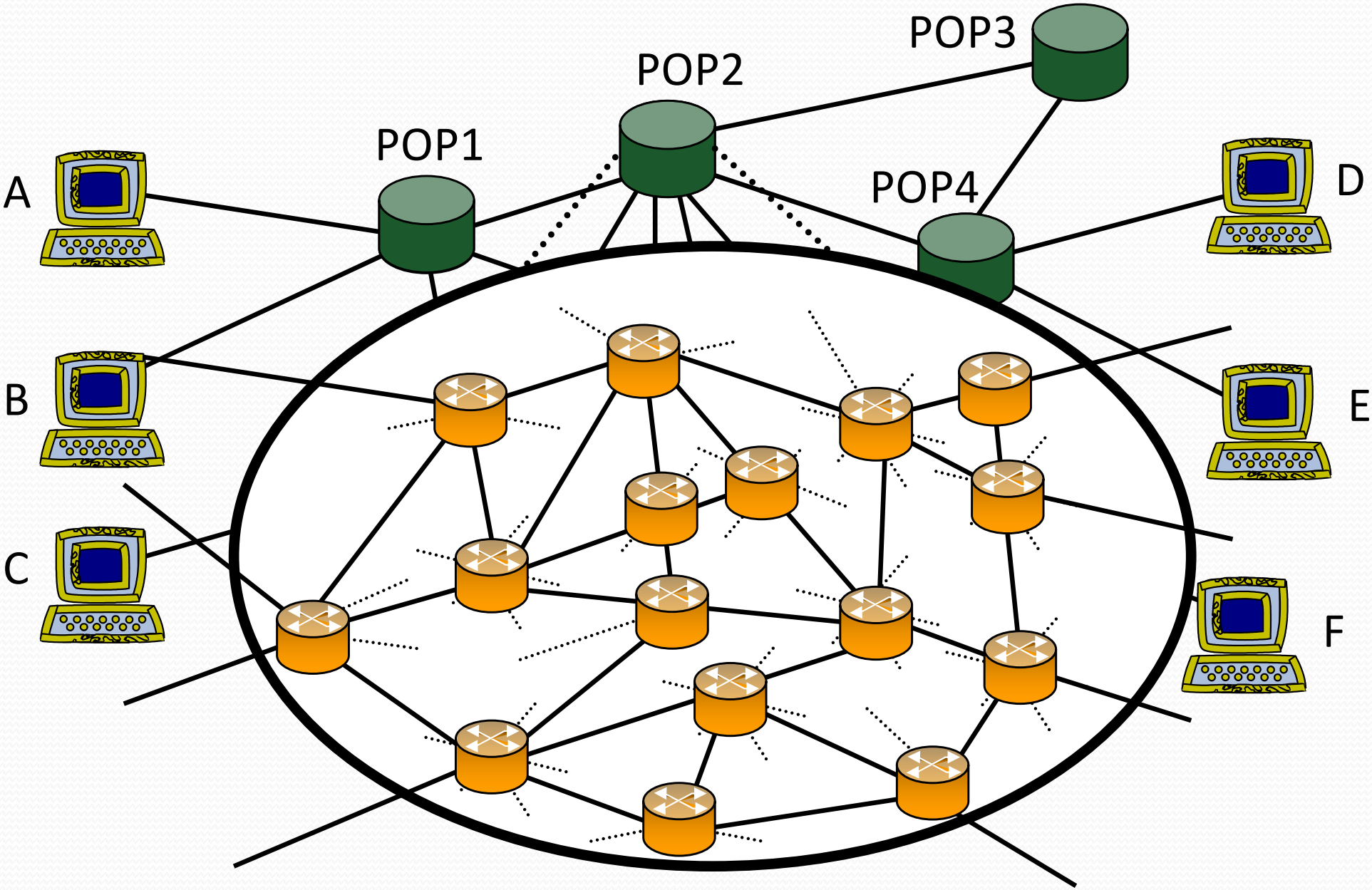

Where High Performance Routers are Used

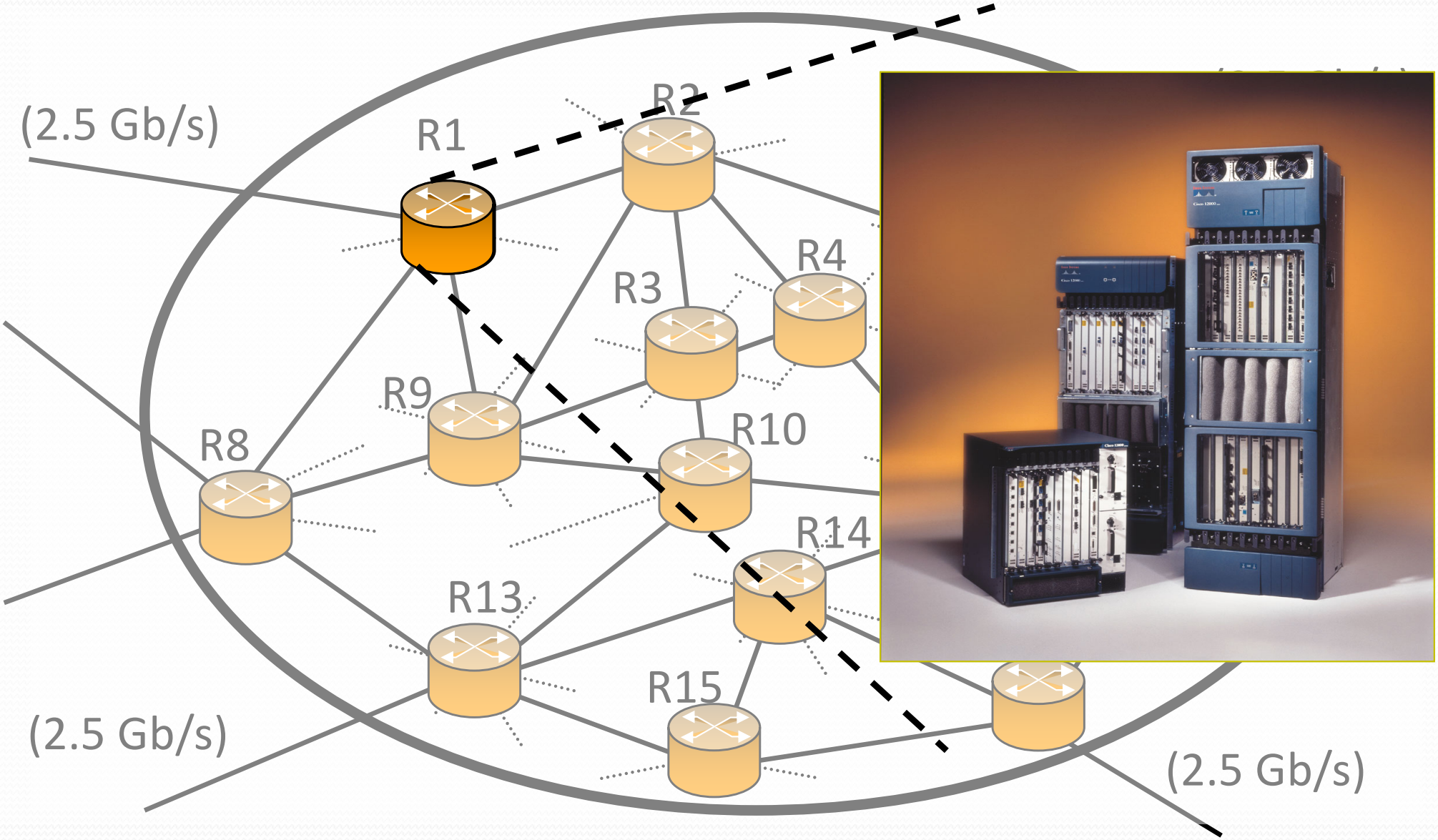

What a Router Looks Like

Cisco CRS-X

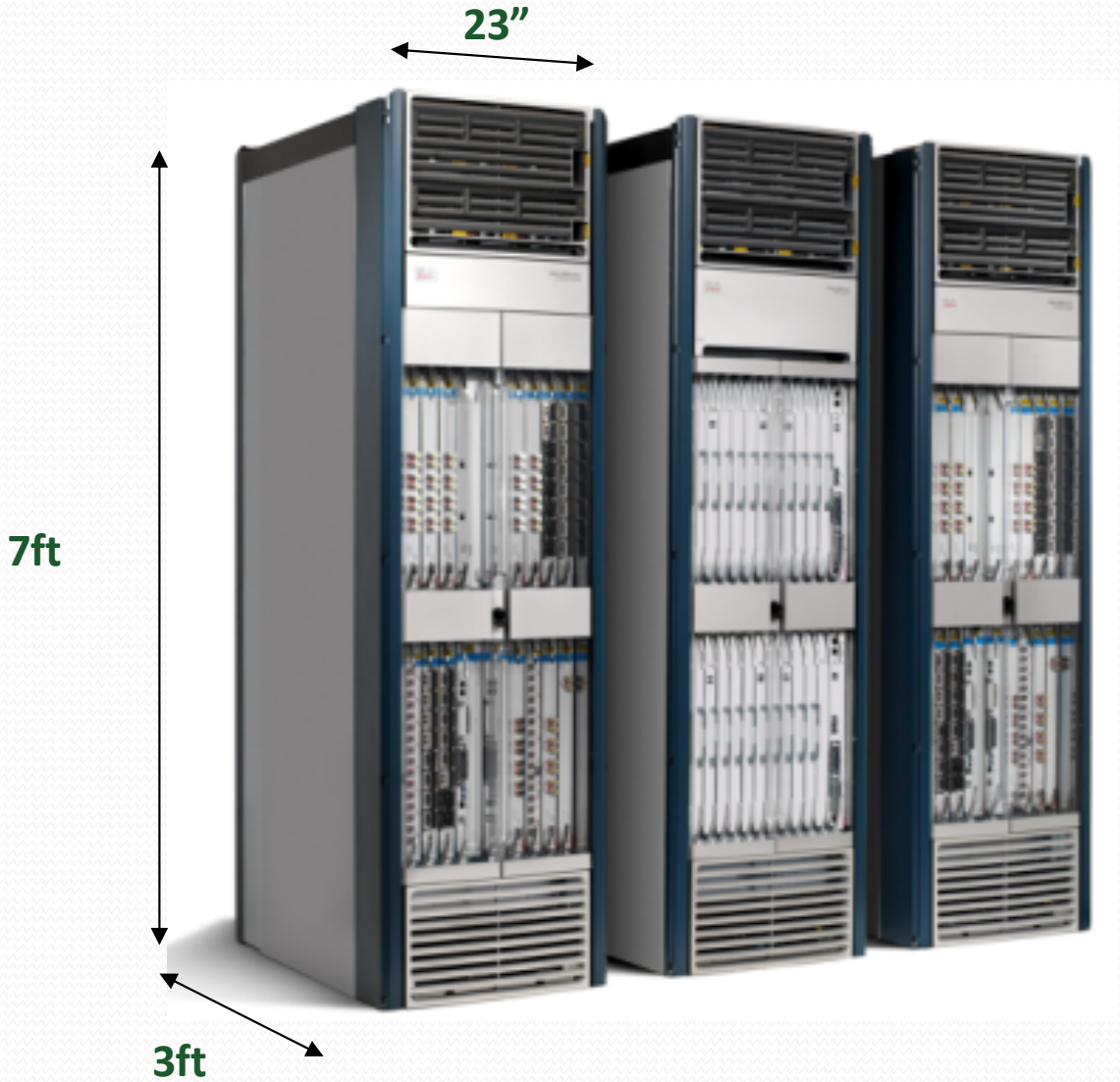

Capacity: 6.4Tb/s
Power: 15.2kW

Basic Architectural Components of an IP Router

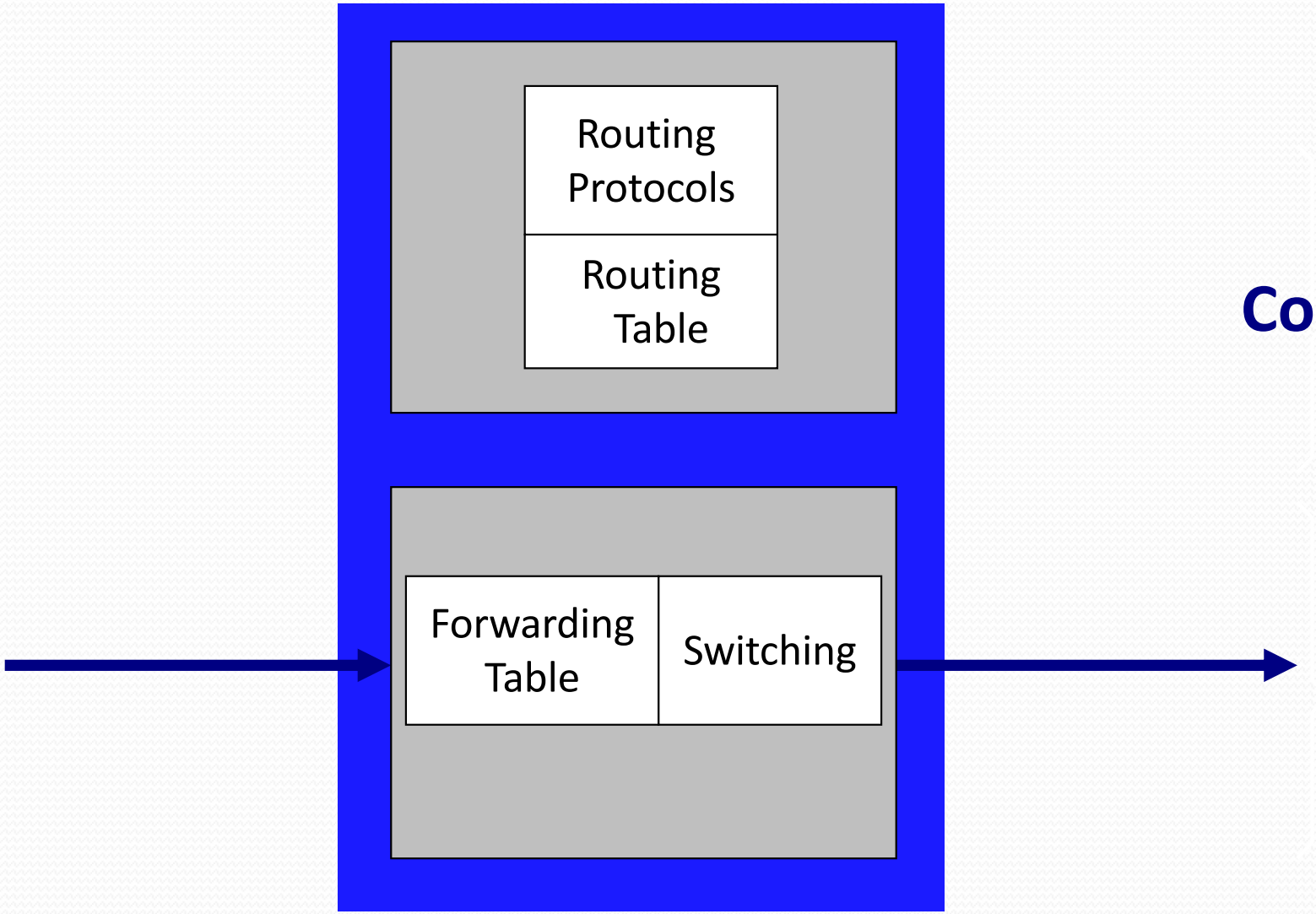

Control Plane

Data-path
per-packet processing

Packet Switching – *Simple Router Model*

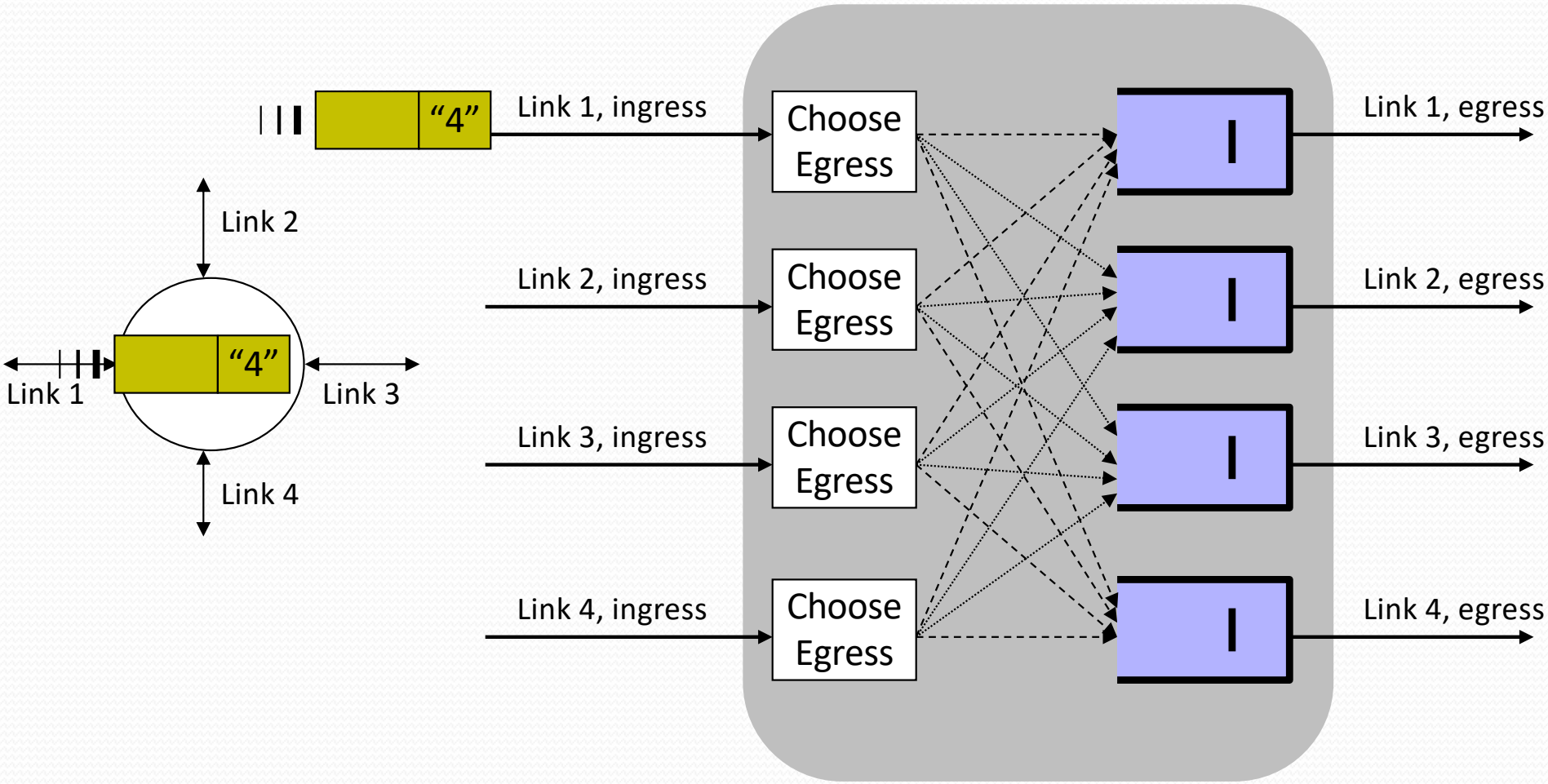

Introduction to Packet Switching

- Background
  - What is a router?
  - Router architecture
- Packet processing in routers
  - IP address lookup
  - Packet buffering
  - Switching
- Router architectures
  - The evolution
  - Software-Defined Networking

Per-packet Processing in an IP Router

1. Accept packet arriving on an incoming link.
2. Lookup packet destination address in the forwarding table, to identify outgoing port(s).
3. Manipulate packet header: e.g., decrement TTL, update header checksum.
4. Send packet to the outgoing port(s).
5. Buffer packet in the queue.
6. Transmit packet onto outgoing link.

Generic Router Architecture

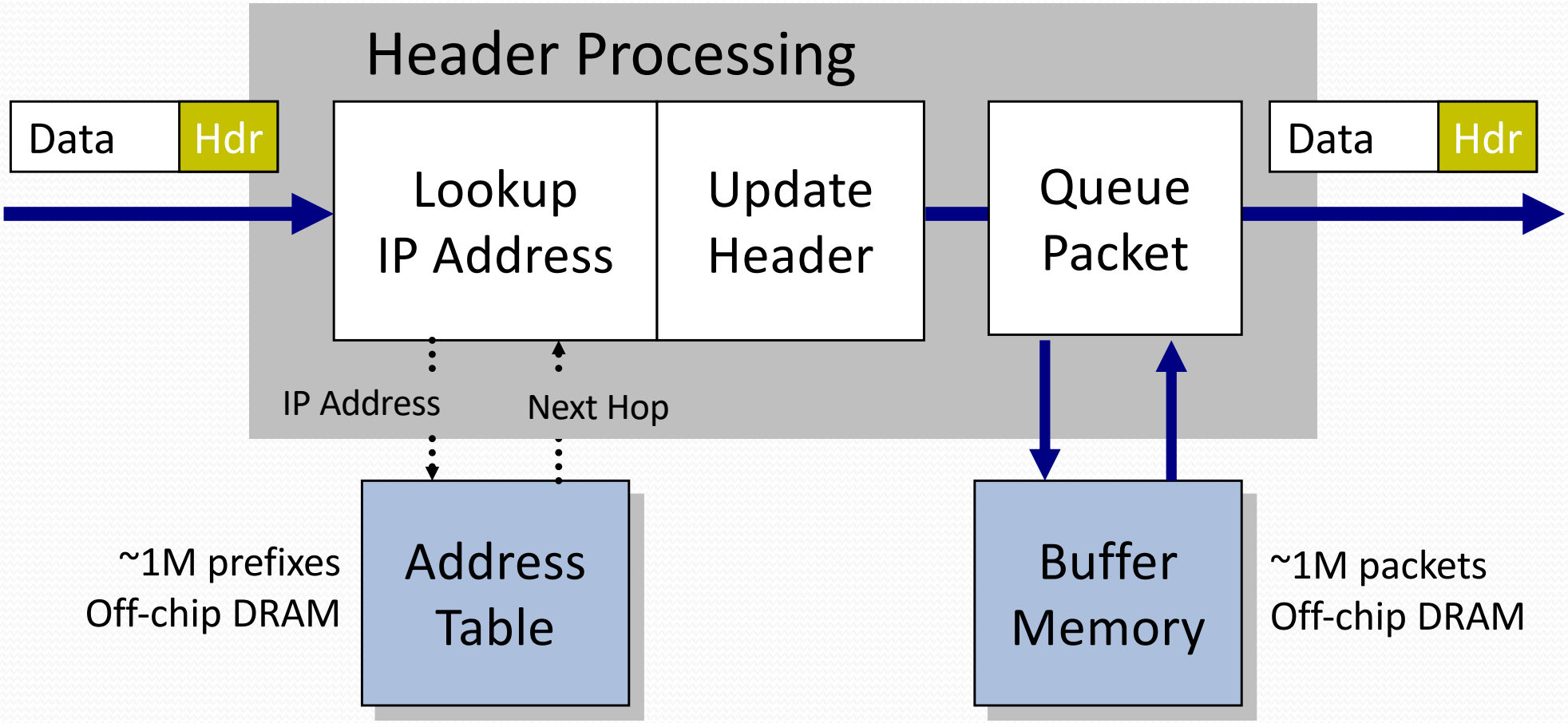

Generic Router Architecture

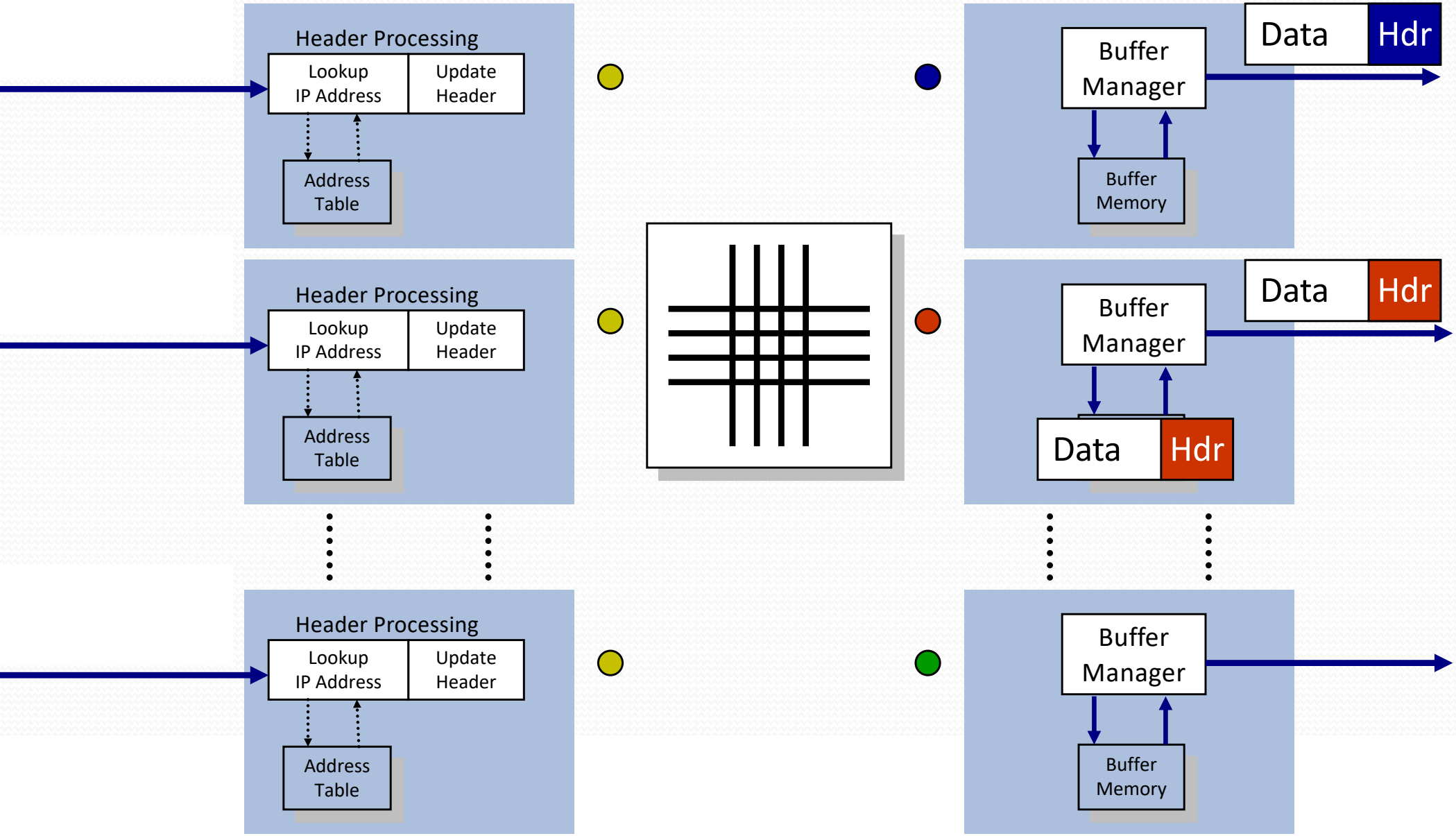

Why are Fast Routers Difficult to Make?

- It's hard to keep up with Moore's Law:
  - The bottleneck is memory speed.
  - Memory speed is not keeping up with Moore's Law.
- Moore's Law is too slow:
  - Routers need to improve faster than Moore's Law.

Router Performance Exceeds Moore's Law

- Growth in capacity of commercial routers:
  - Capacity 1992 ~ 2Gb/s
  - Capacity 1995 ~ 10Gb/s
  - Capacity 1998 ~ 40Gb/s
  - Capacity 2001 ~ 160Gb/s
  - Capacity 2003 ~ 640Gb/s
  - Capacity 2007 ~ 4Tb/s
  - Capacity 2010 ~ 16Tb/s
  - Capacity 2020 ~ 1Pb/s?

Average growth rate: 2x / 18 months.

Introduction to Packet Switching

- Background
  - What is a router?
  - Router architecture

- Packet processing in routers
  - IP address lookup
  - Packet buffering
  - Switching

- Router architectures
  - The evolution
  - Software-Defined Networking

Generic Router Architecture

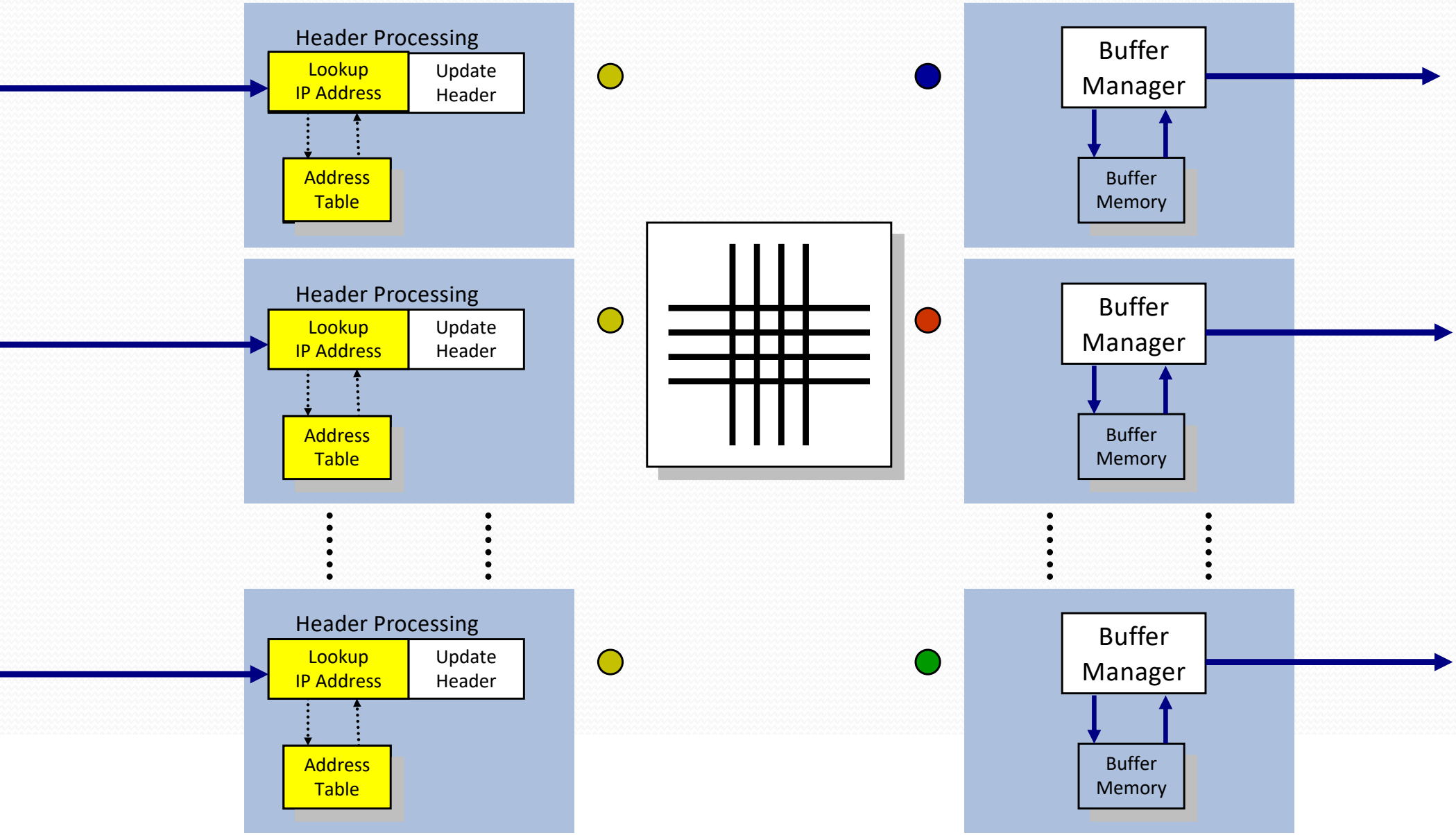

IP Address Lookup

- Why it's thought to be hard:
  1. It's not an exact match: it's a longest prefix match.
  2. The table is large: about 850,000 entries today, and growing.
  3. The lookup must be fast: about 4-5ns for a 100Gb/s line.

IP Lookups find Longest Prefixes

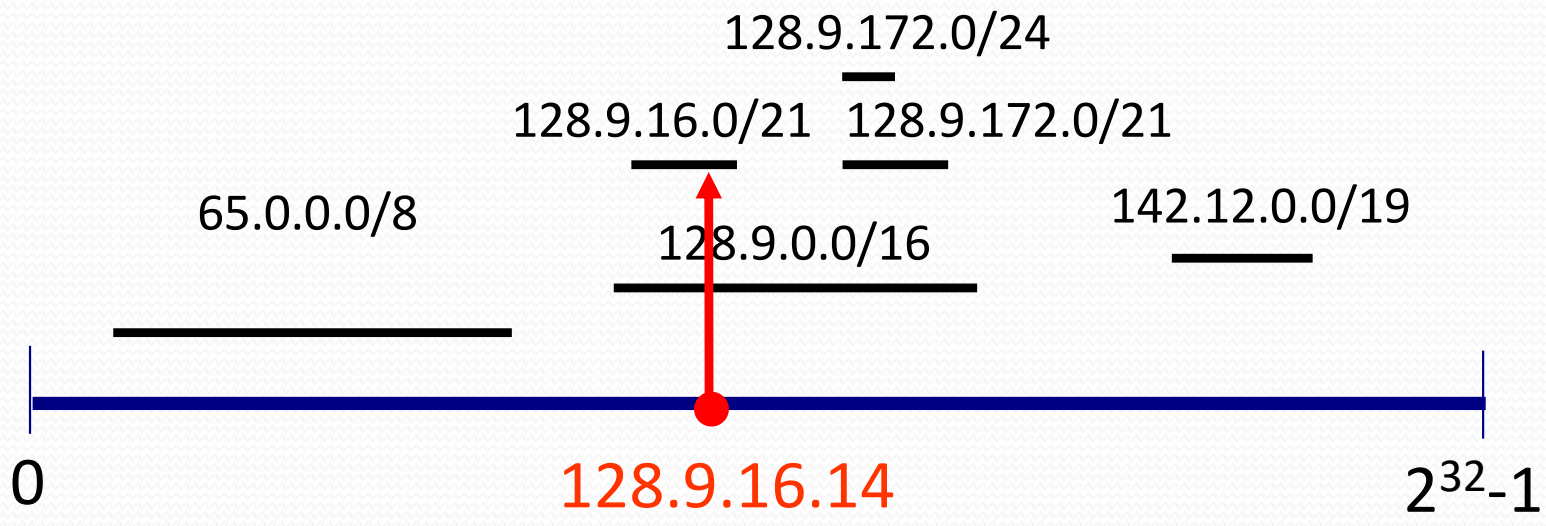

Routing lookup: Find the longest matching prefix (aka the most specific route) among all prefixes that match the destination address.

IP Address Lookup

- Why it's thought to be hard:
  1. It's not an exact match: it's a longest prefix match.
  2. The table is large: about 850,000 entries today, and growing.
  3. The lookup must be fast: about 4-5ns for a 100Gb/s line.

Address Tables are Large

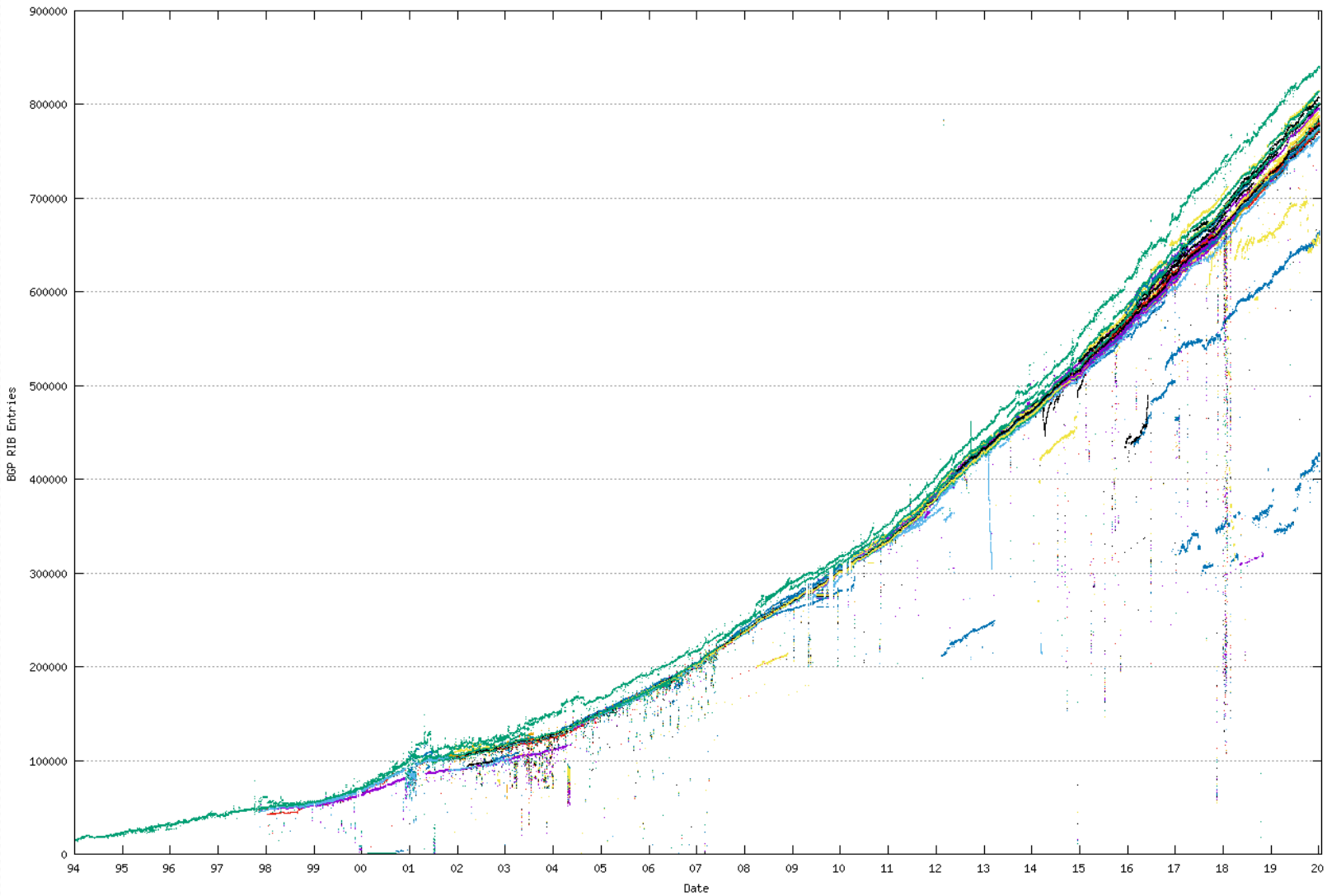

Source: http://www.cidr-report.org/

IP Address Lookup

- Why it's thought to be hard:
  1. It's not an exact match: it's a longest prefix match.
  2. The table is large: about 850,000 entries today, and growing.
  3. The lookup must be fast: about 4-5ns for a 100Gb/s line.

Lookups Must be Fast

- Line rates have been constantly growing over time.
  - 100Gb/s to 500Gb/s
- Packet sizes have not changed
  - Max: 1500 bytes (9000 jumbo packets)
  - Average: around 250 bytes
  - Min: 40 bytes
- Time to process each packet around a few nano-seconds

Introduction to Packet Switching

- Background
  - What is a router?
  - Router architecture
- Packet processing in routers
  - IP address lookup
  - Packet buffering
  - Switching
- Router architectures
  - The evolution
  - Software-Defined Networking

Generic Router Architecture

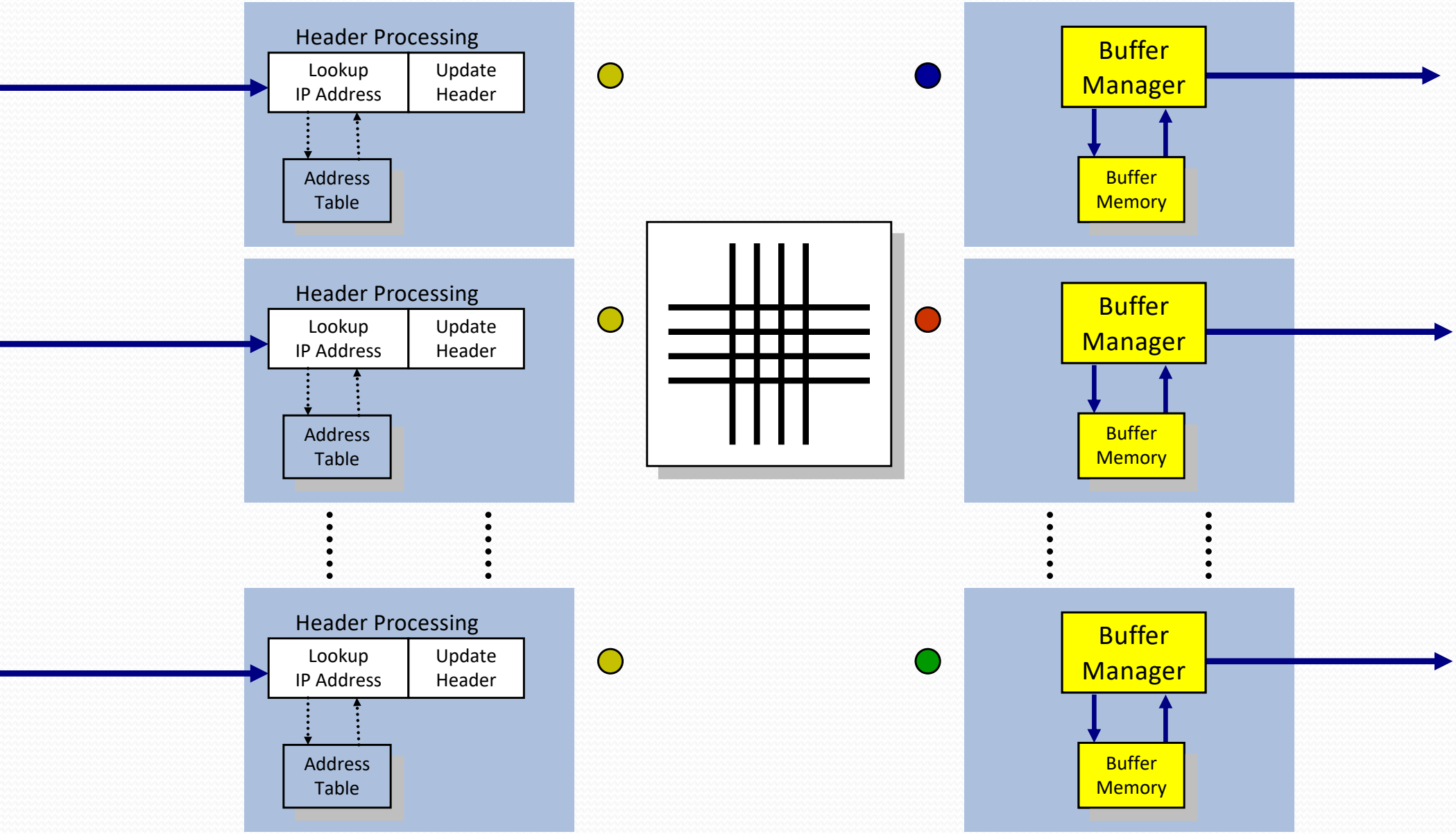

Fast Packet Buffers

Example: 40Gb/s packet buffer

Size = RTT*BW = 10Gb; 40 byte packets

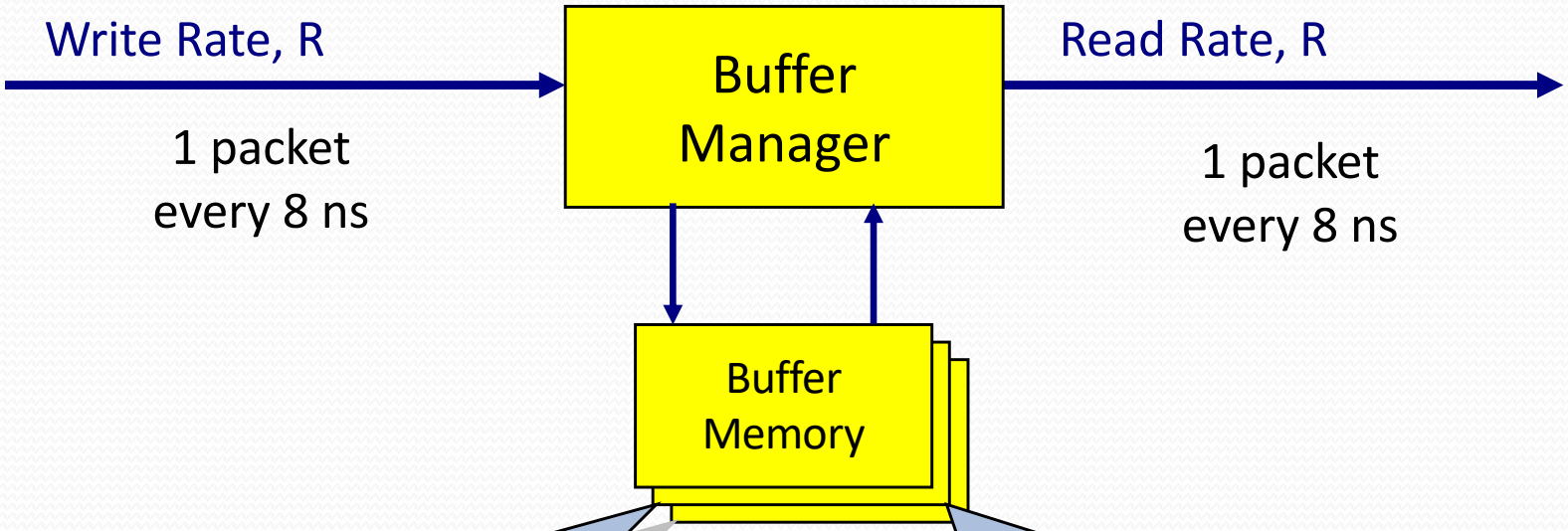

Use SRAM?

+ fast enough random access time, but

- too low density to store 10Gb of data.

Use DRAM?

+ high density means we can store data, but

- too slow (50ns random access time).

Introduction to Packet Switching

- Background
  - What is a router?
  - Router architecture
- Packet processing in routers
  - IP address lookup
  - Packet buffering
  - Switching
- Router architectures
  - The evolution
  - Software-Defined Networking

Generic Router Architecture

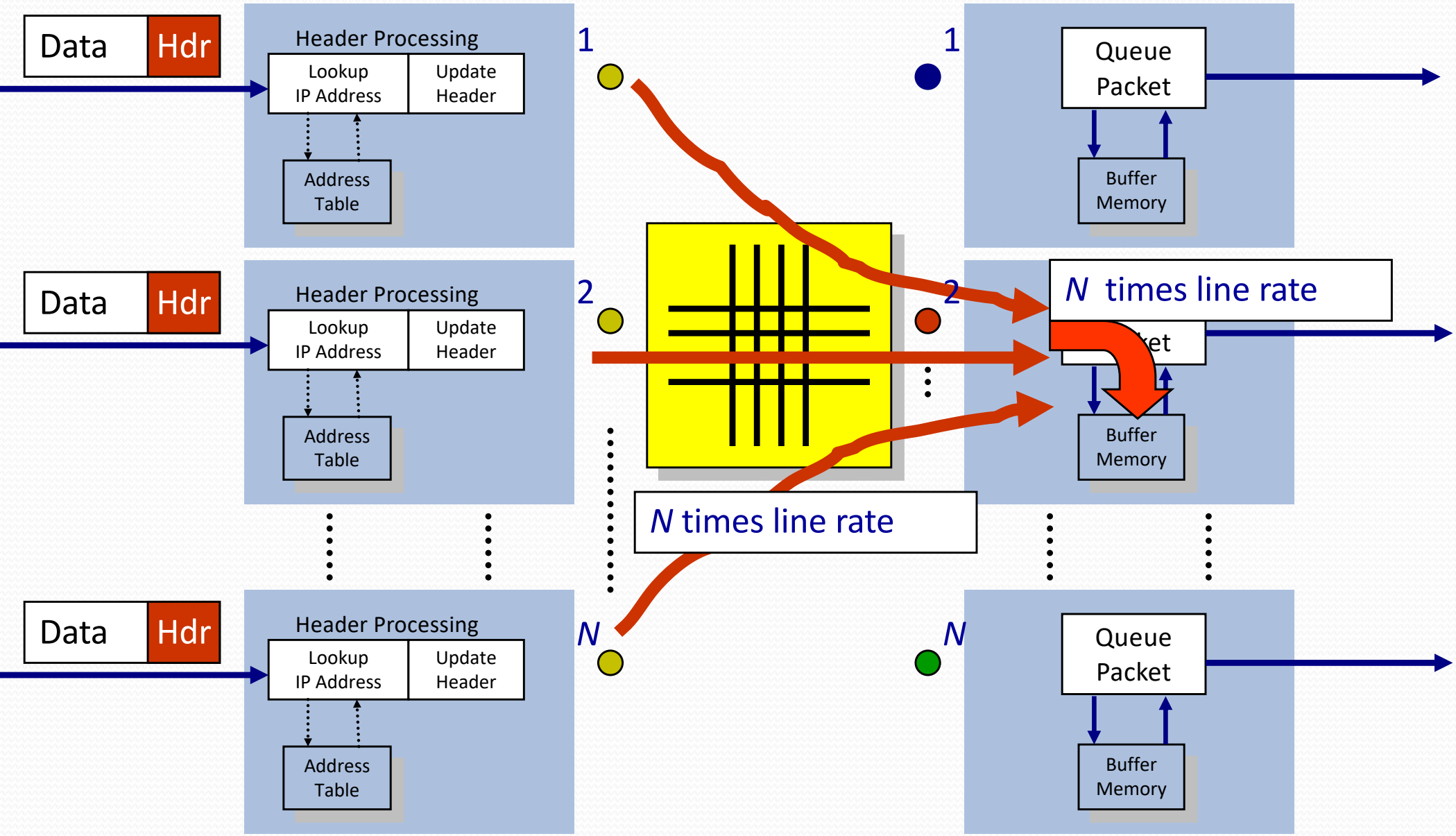

Generic Router Architecture

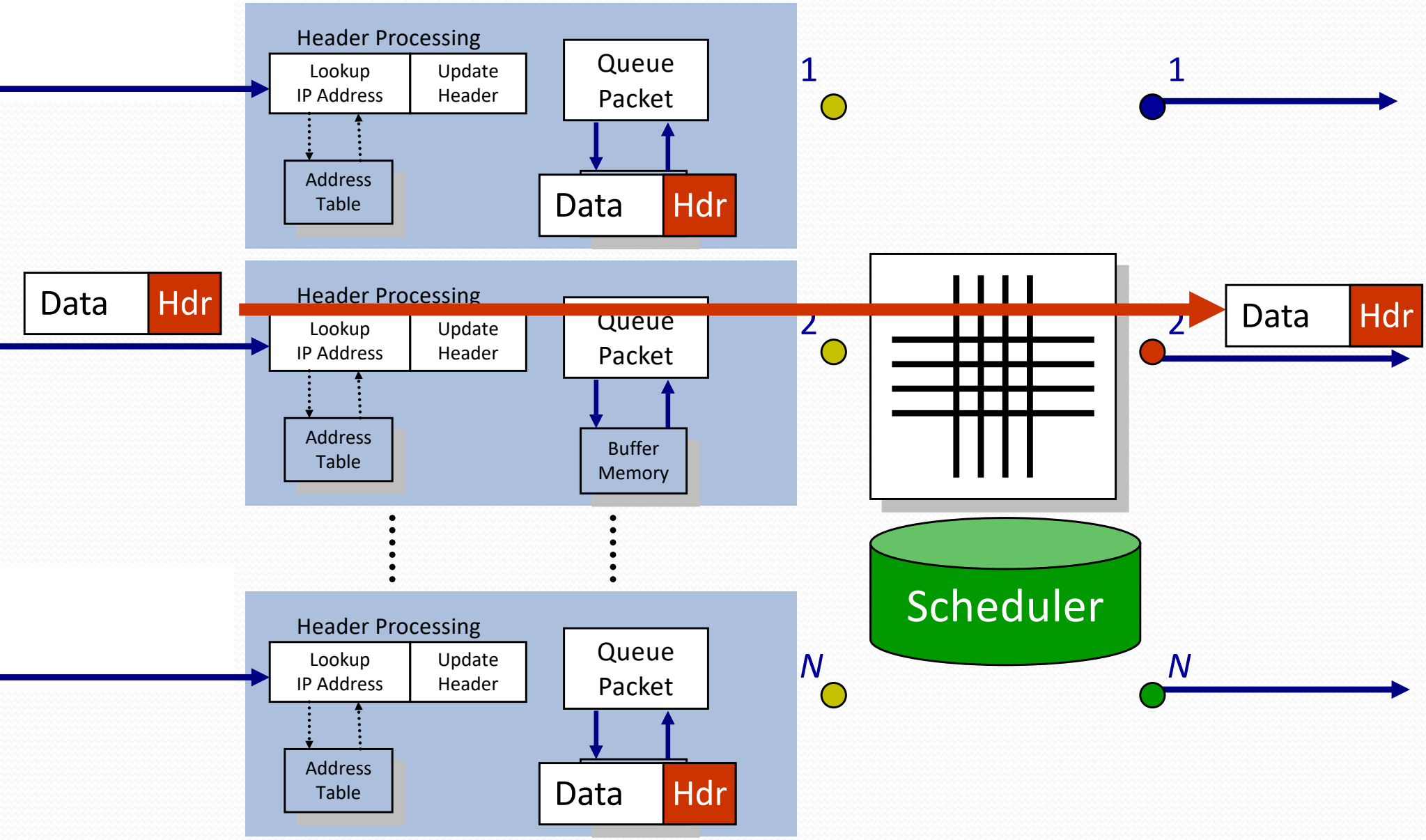

A Router with Output Queues

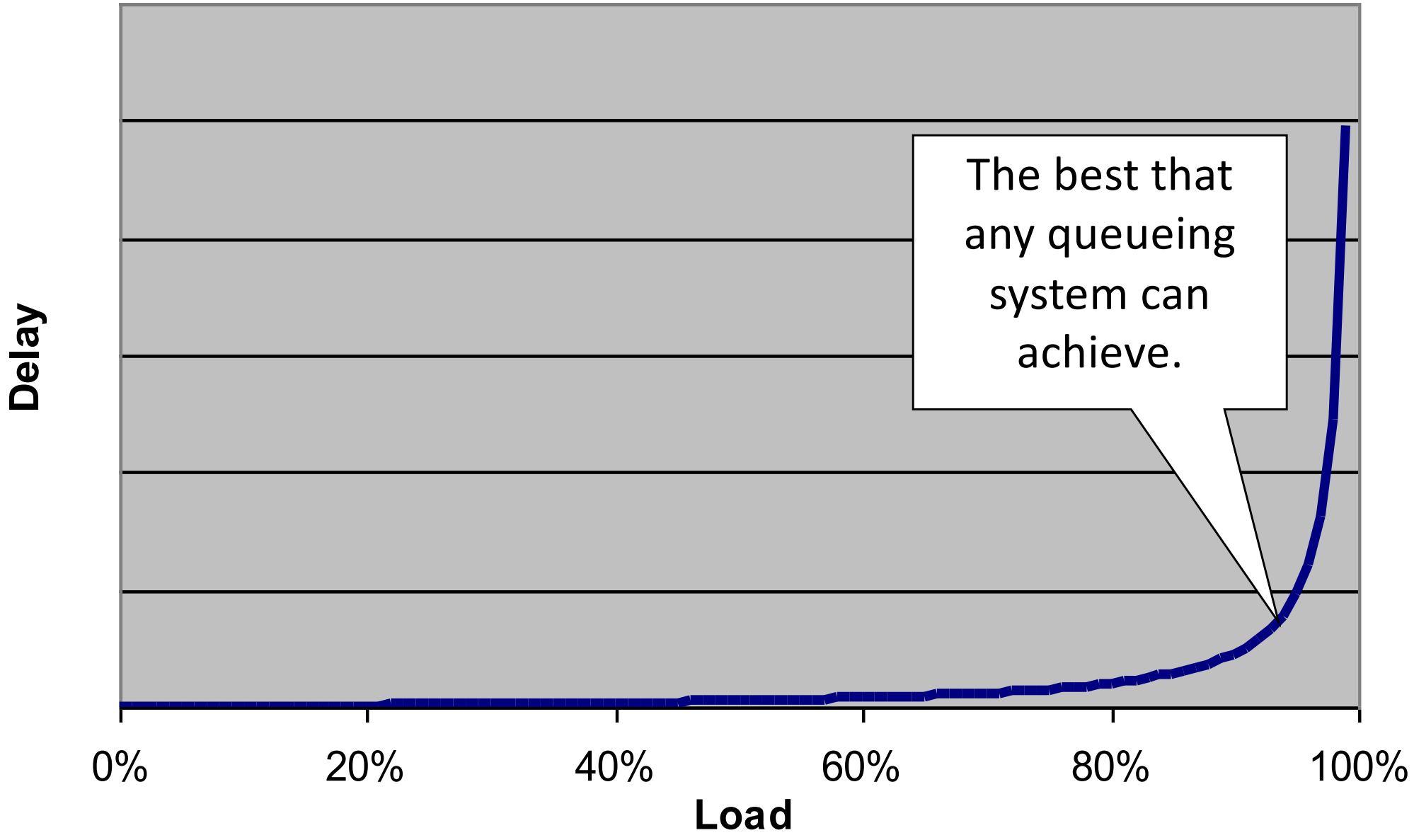

A Router with Input Queues

Head of Line Blocking

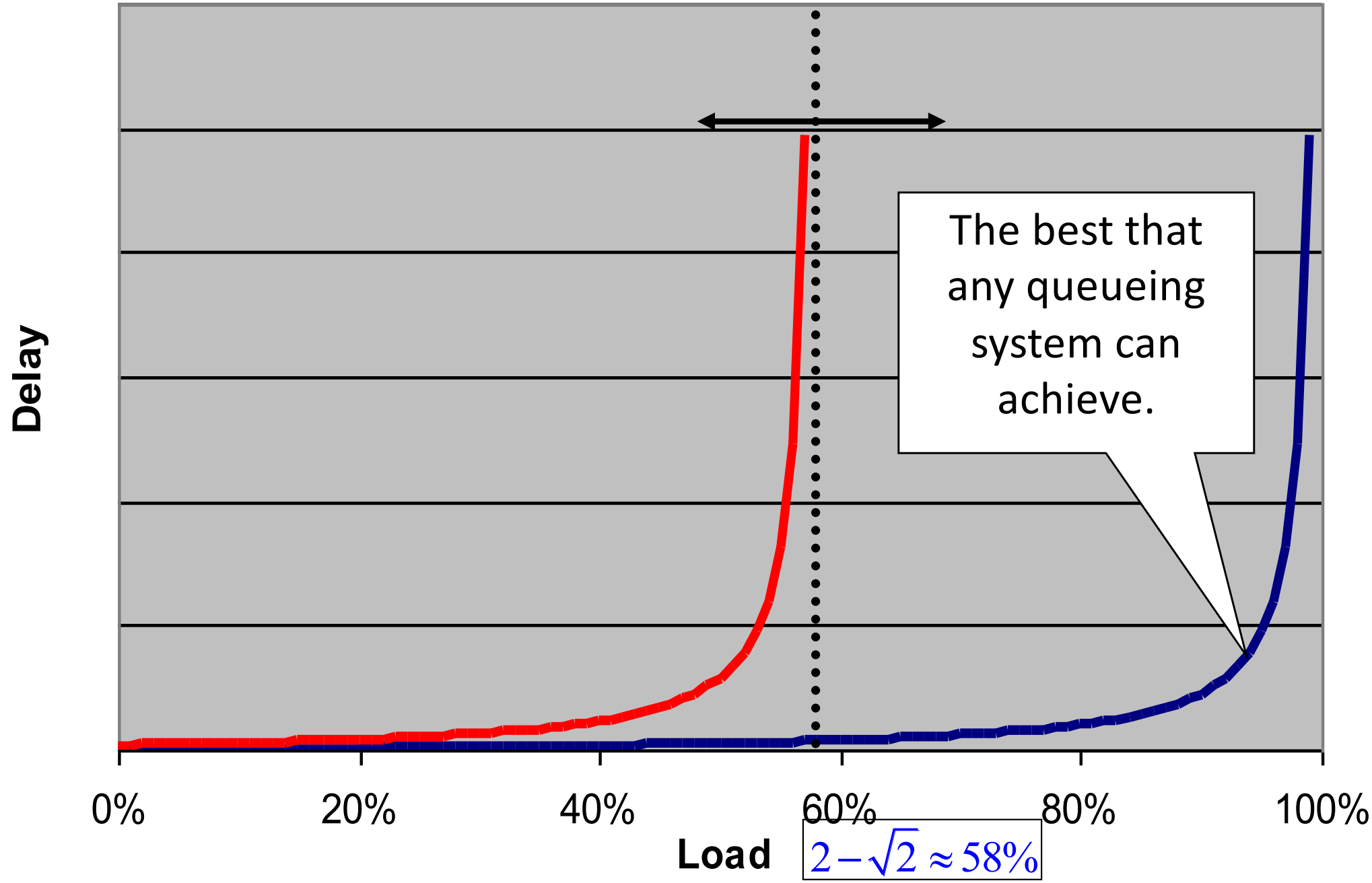

Head of Line Blocking

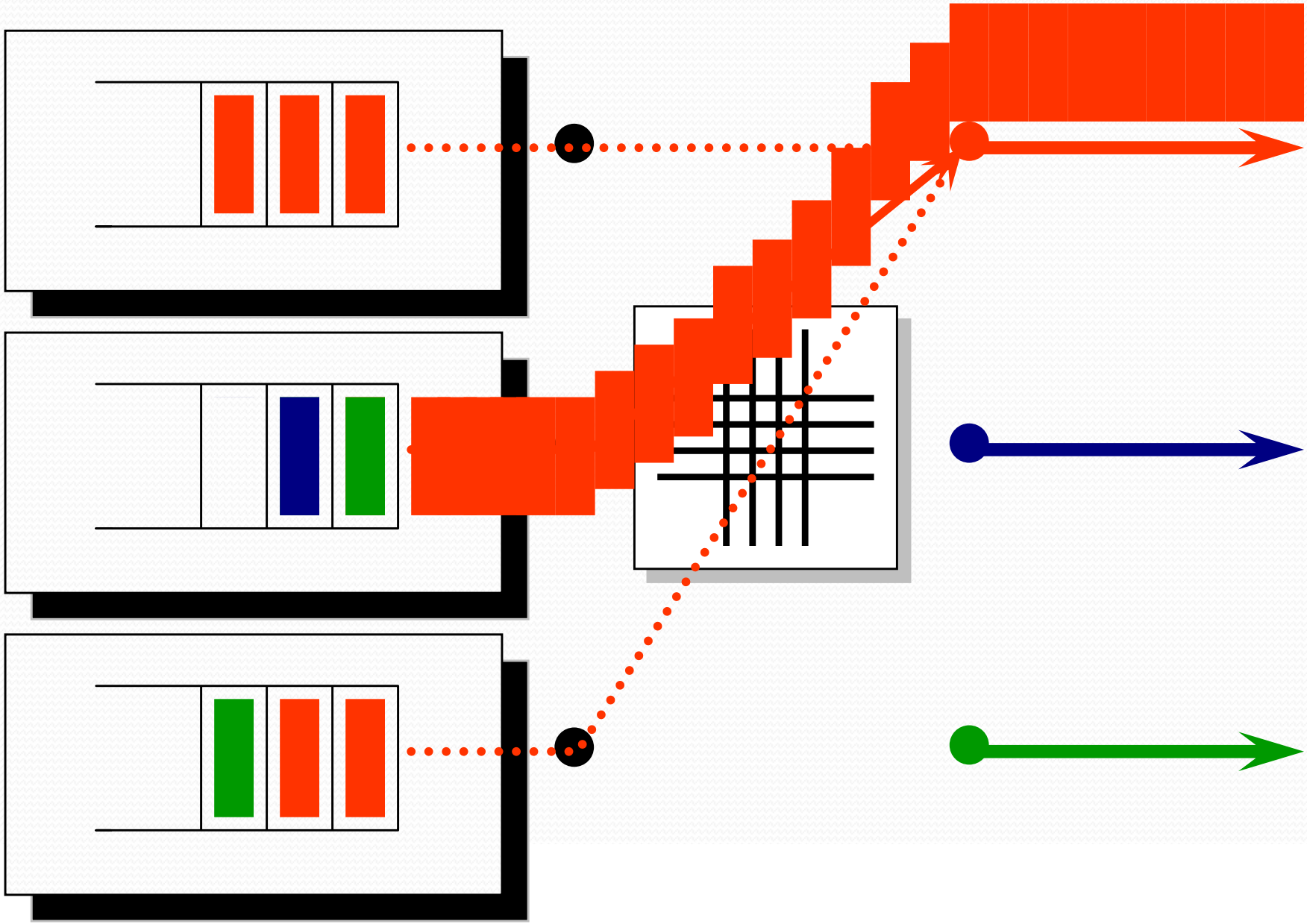

Virtual Output Queues

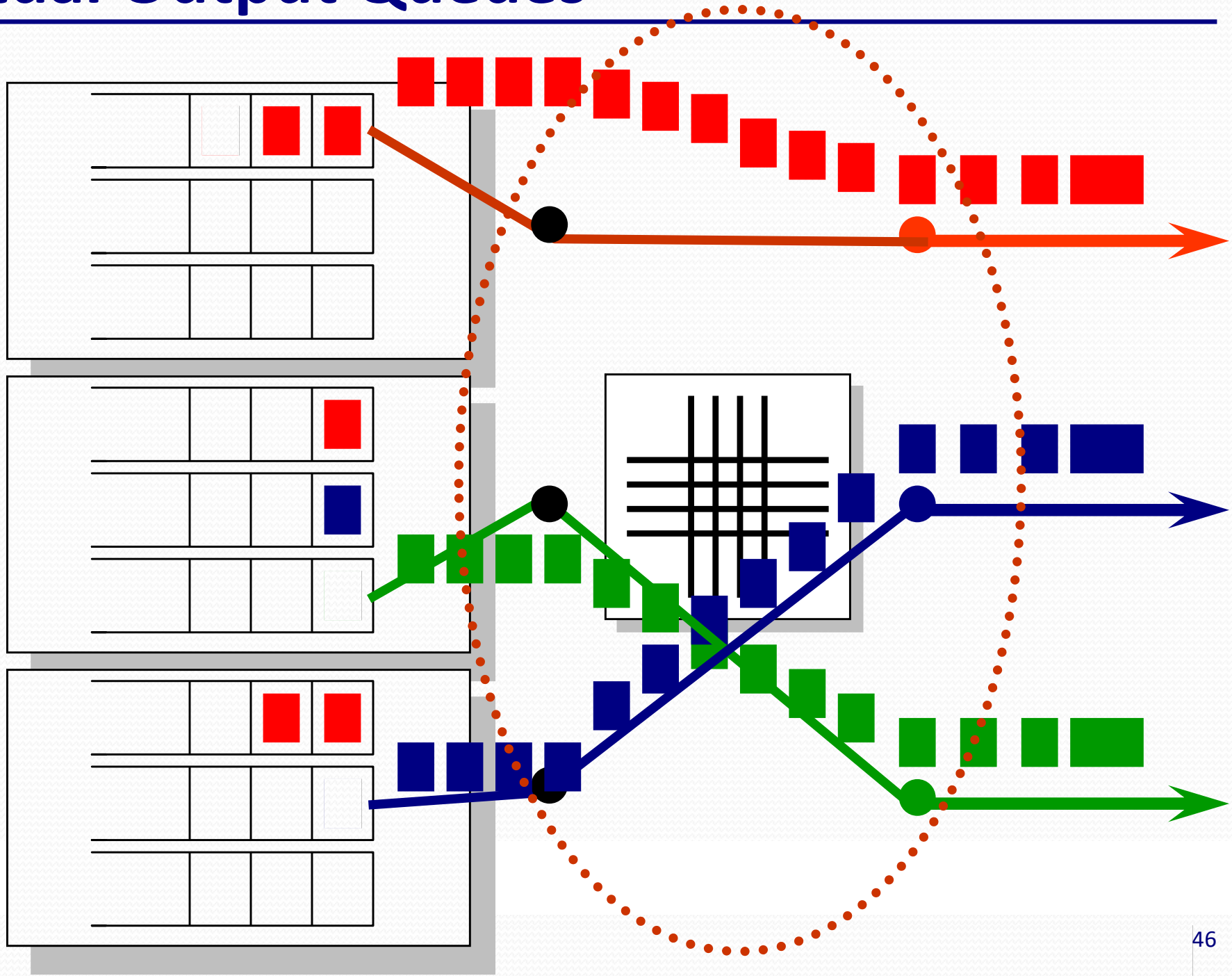

A Router with Virtual Output Queues

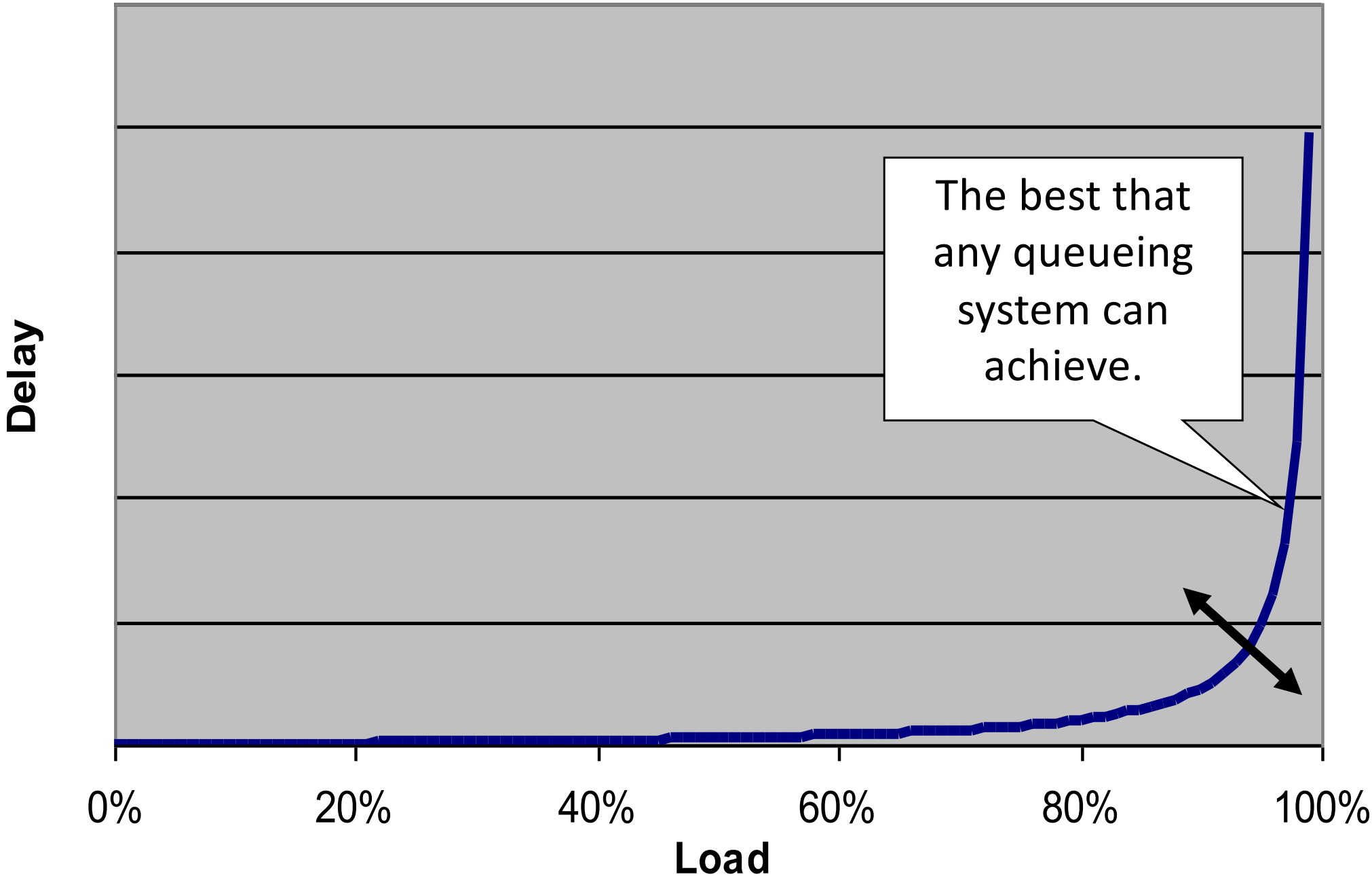

Generic Router Architecture

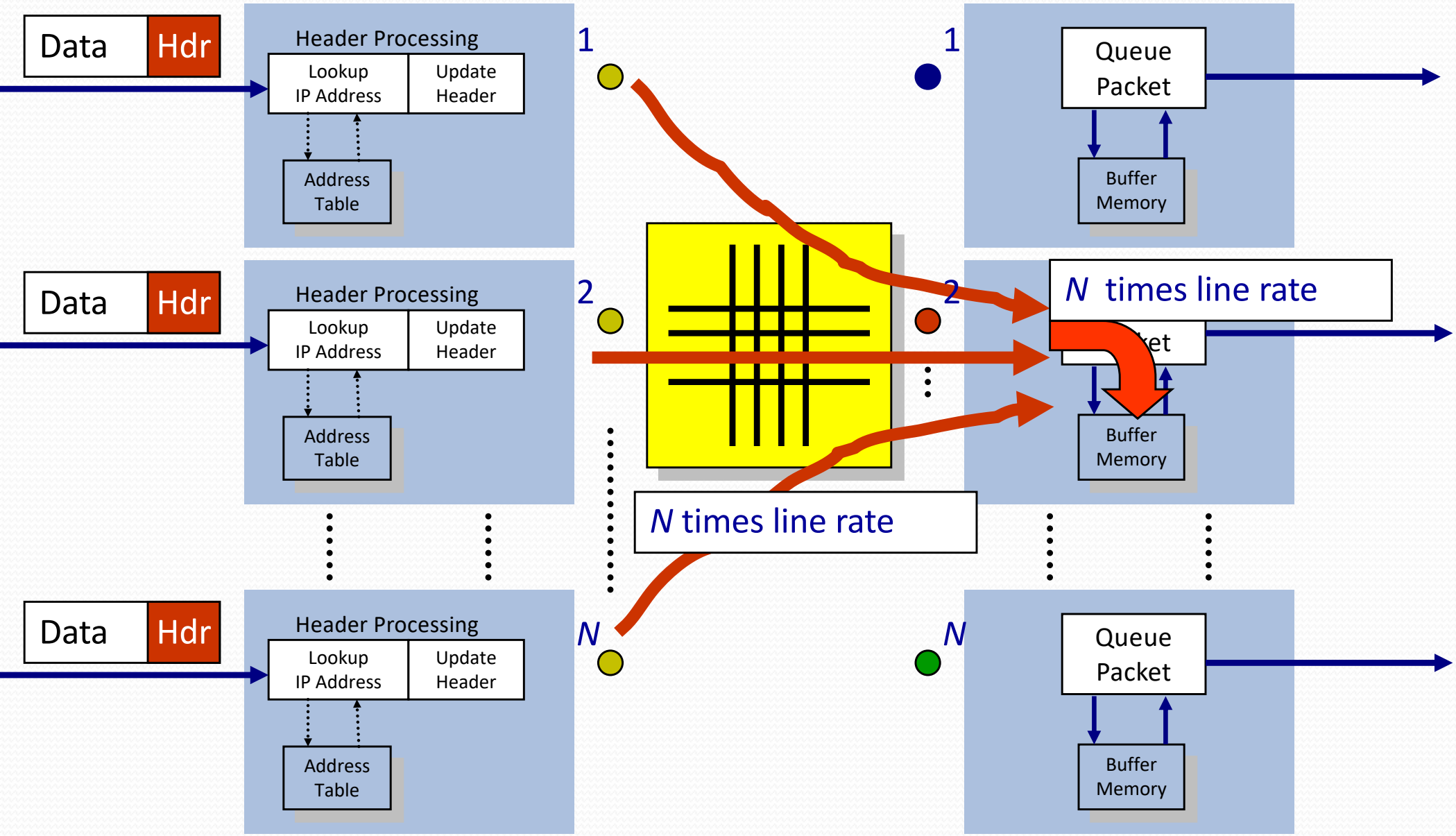

Introduction to Packet Switching

- Background
  - What is a router?
  - Router architecture
- Packet processing in routers
  - IP address lookup
  - Packet buffering
  - Switching
- Router architectures
  - The evolution
  - Software-Defined Networking

First Generation Routers

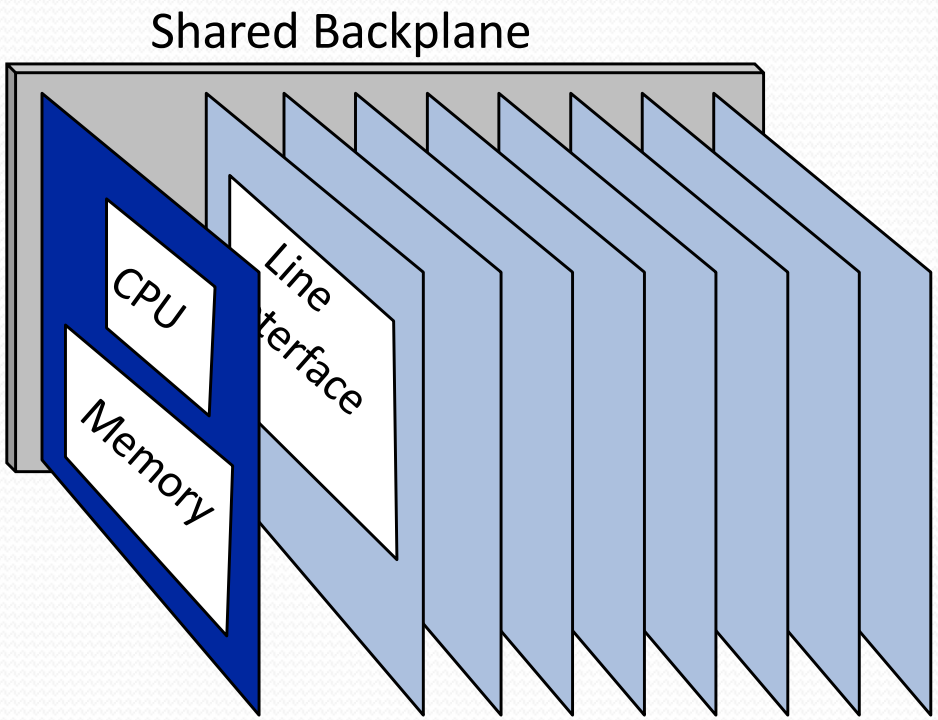

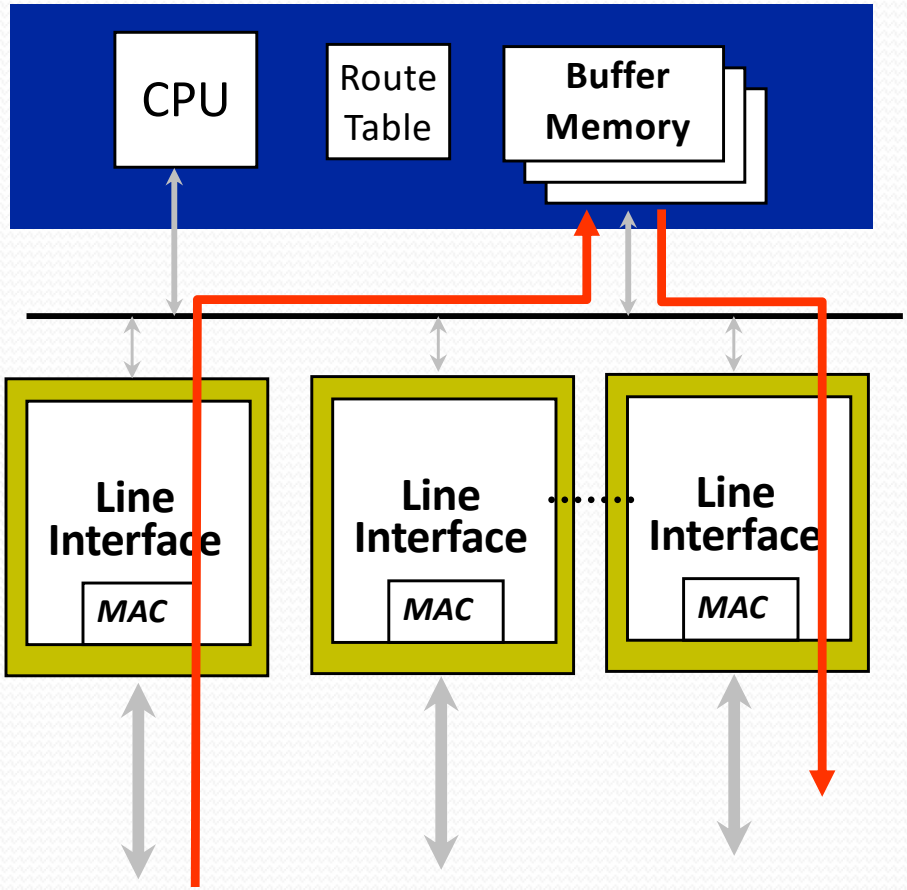

Typically <0.5Gb/s aggregate capacity

Second Generation Routers

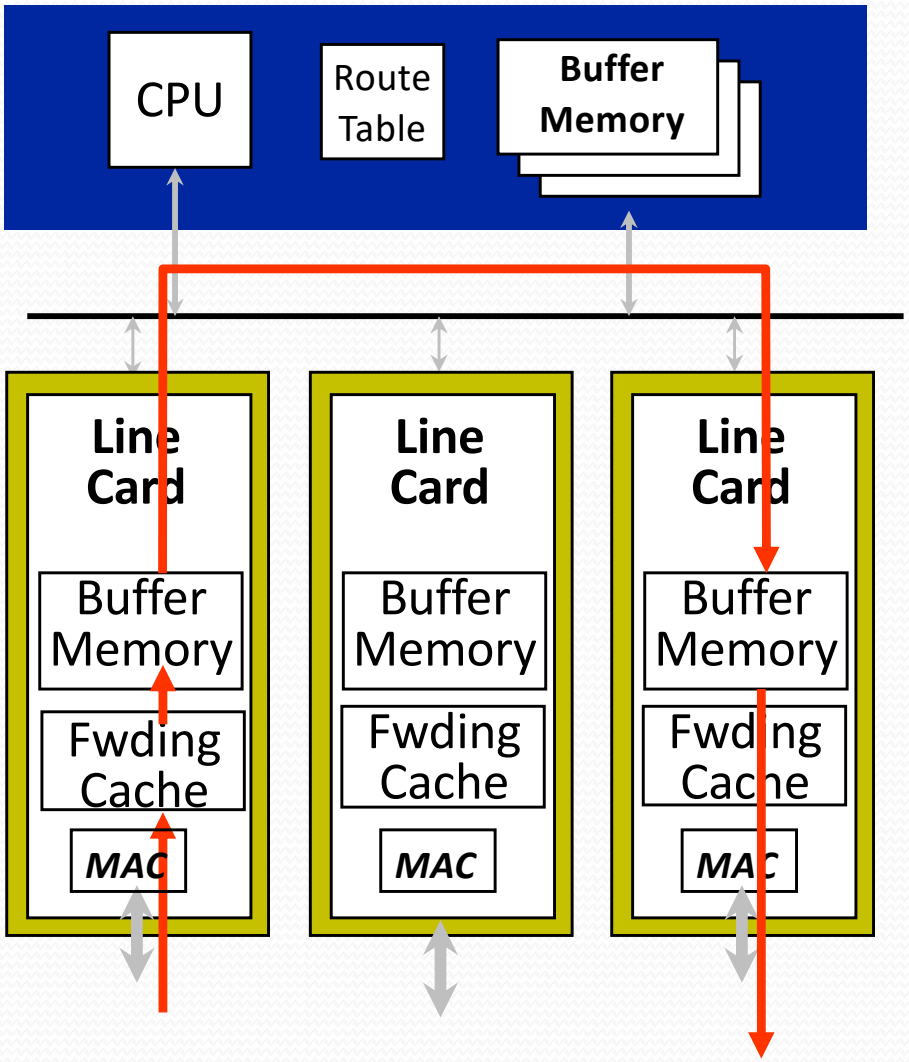

Typically <5Gb/s aggregate capacity

Third Generation Routers

Switched Backplane

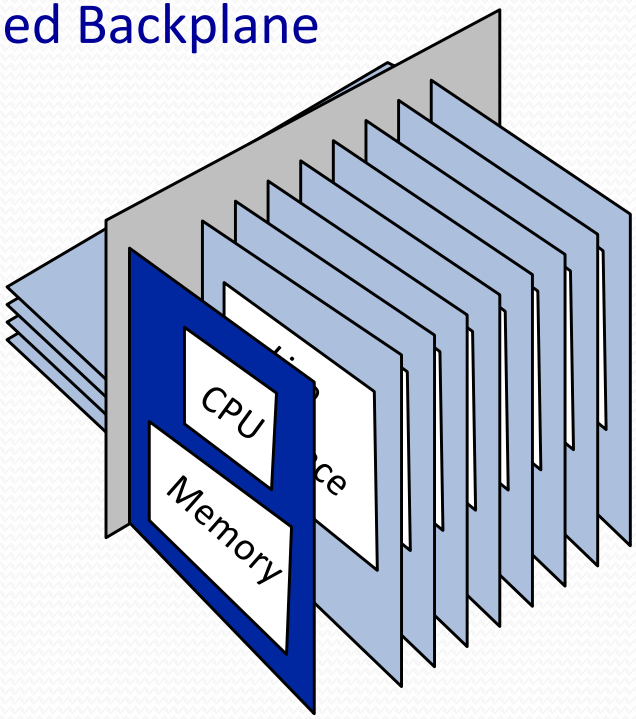

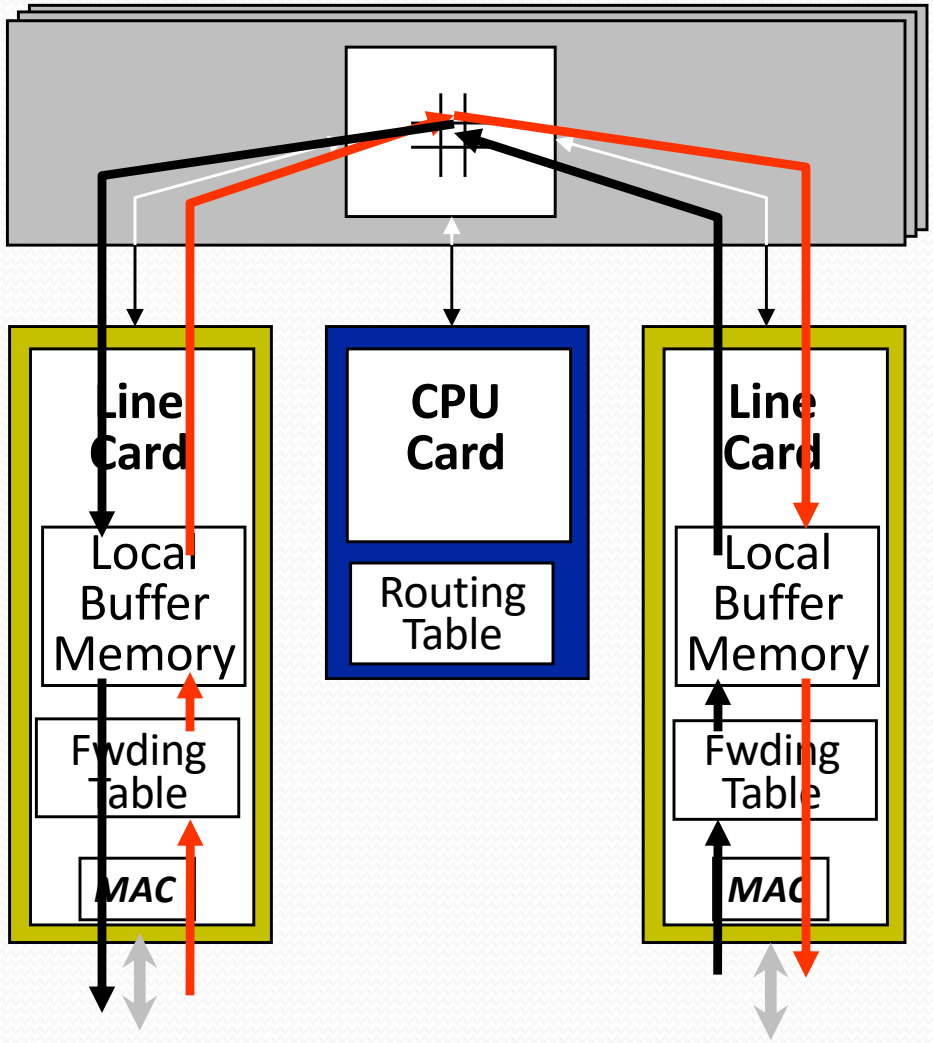

Typically <50Gb/s aggregate capacity

Fourth Generation Routers/Switches

Optics inside a router for the first time

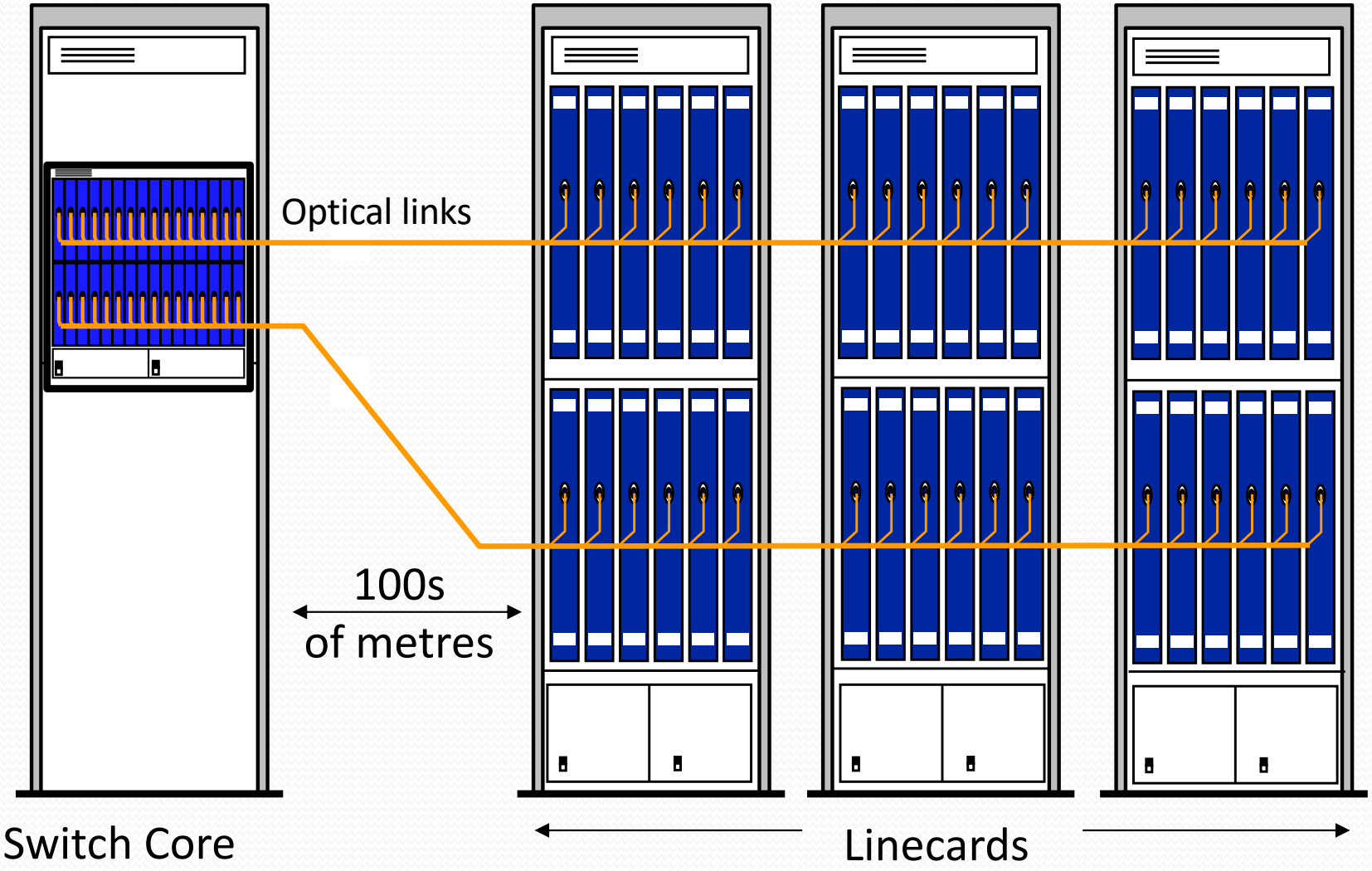

0.3 - 10Tb/s routers in development

Introduction to Packet Switching

- Background
  - What is a router?
  - Router architecture
- Packet processing in routers
  - IP address lookup
  - Packet buffering
  - Switching
- Router architectures
  - The evolution
  - Software-Defined Networking

Software Defined Networks

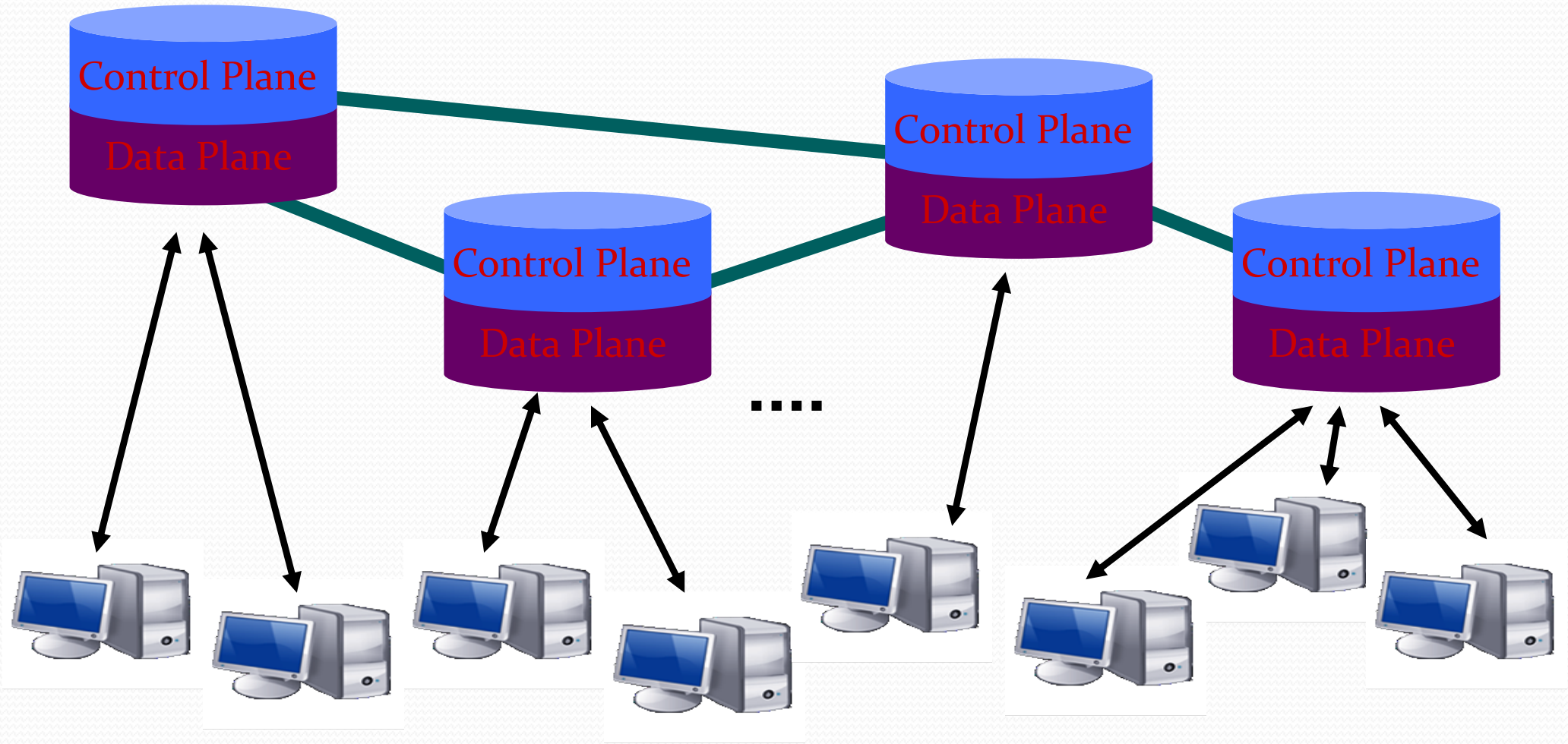

Software Defined Networks – Cont'd

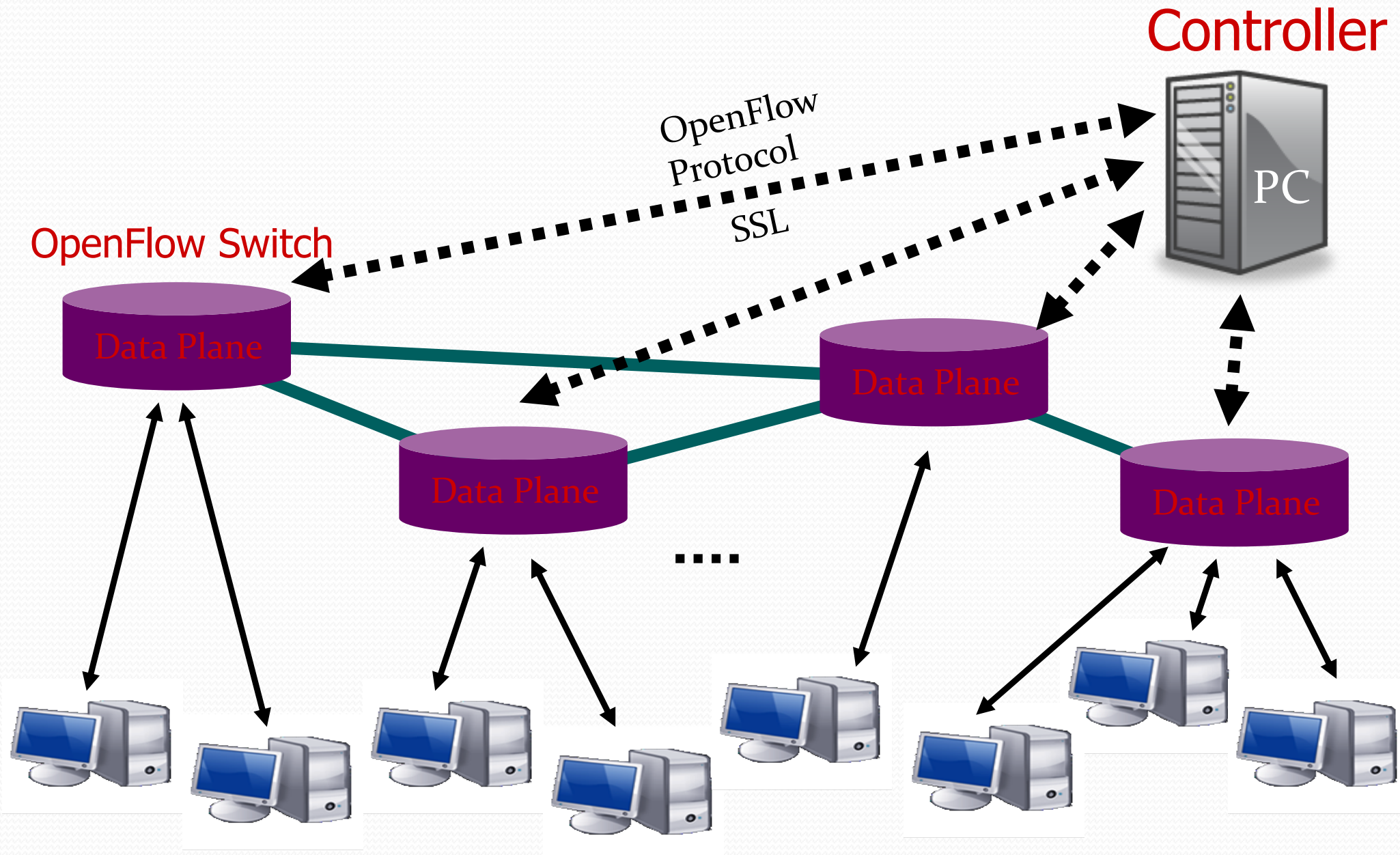

Final Comments/Questions

- What other line rate functionalities can you think of (other than packet forwarding)?
  - Are they performance bottleneck in today's networks?
  - How would they evolve over time?
  - Do they belong on data path?

- Control and management complexity
  - What control functionalities do we have in networks today?
  - How do we manage those?
  - What can we do to simplify this?