CSC 458/2209 – Computer Networks

Handout # 22
Network Security & Final Review

Professor Yashar Ganjali

Department of Computer Science

University of Toronto

yganjali@cs.toronto.edu

http://www.cs.toronto.edu/~yganjali

Announcements

- Programming Assignment 2
  - Due: Friday Dec. 2nd
- Final exam time:
  - Friday Dec. 9th, 2 PM – 5 PM
  - Please check class web site for location.
  - Sample problems and solutions posted online.
- This week's tutorial: final exam review

Today

- Network security
- Final review

Connectivity: Good vs. Evil

- Network have improved significantly: in terms of bandwidth and latency
  - Good
    - We can communicate
    - Exchange information
    - Transfer data
    - …
  - Evil
    - It's easier to do harm
    - Harmful code can propagate faster
    - Information collection, violating privacy
    - …

Life Just Before Slammer

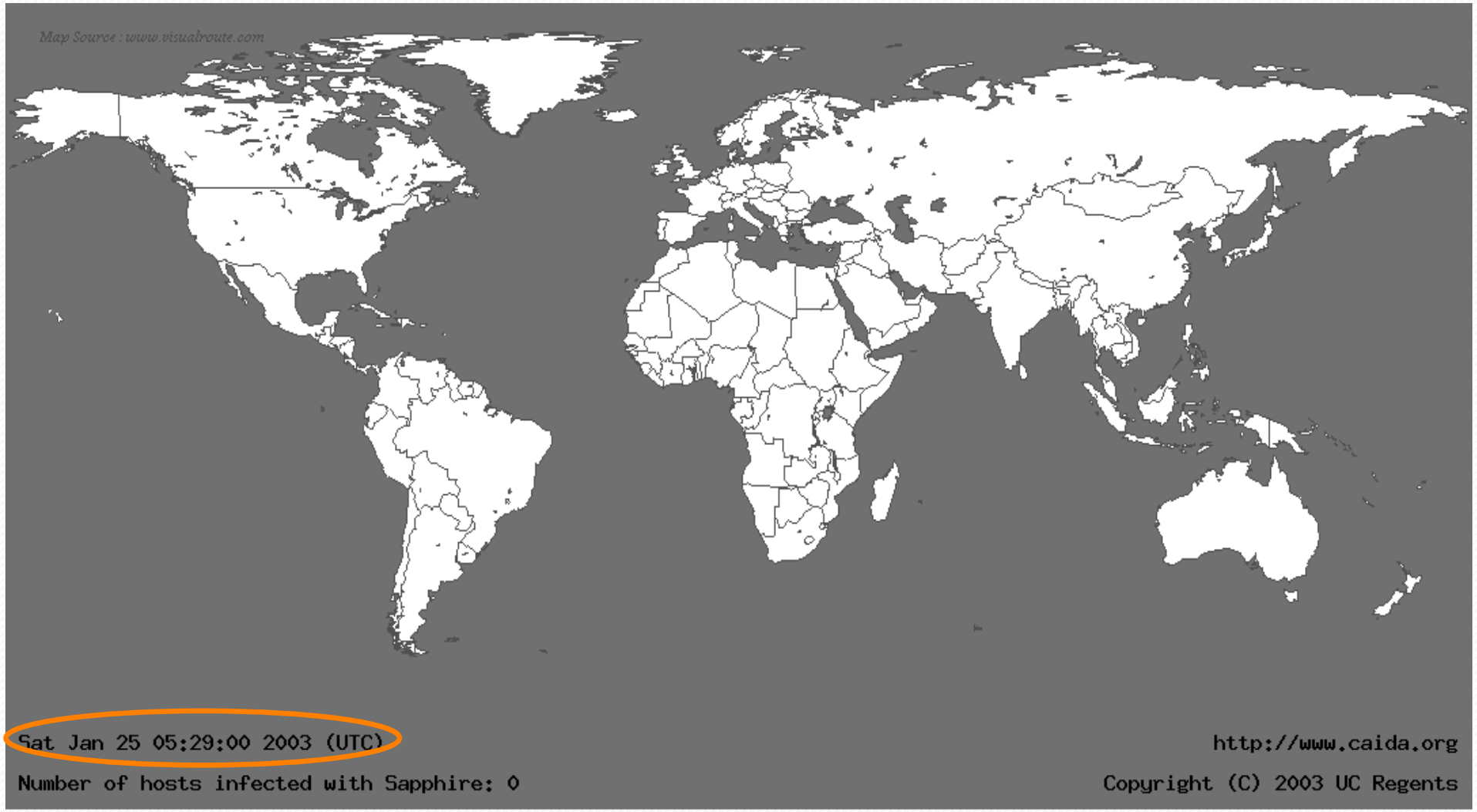

Life Just After Slammer

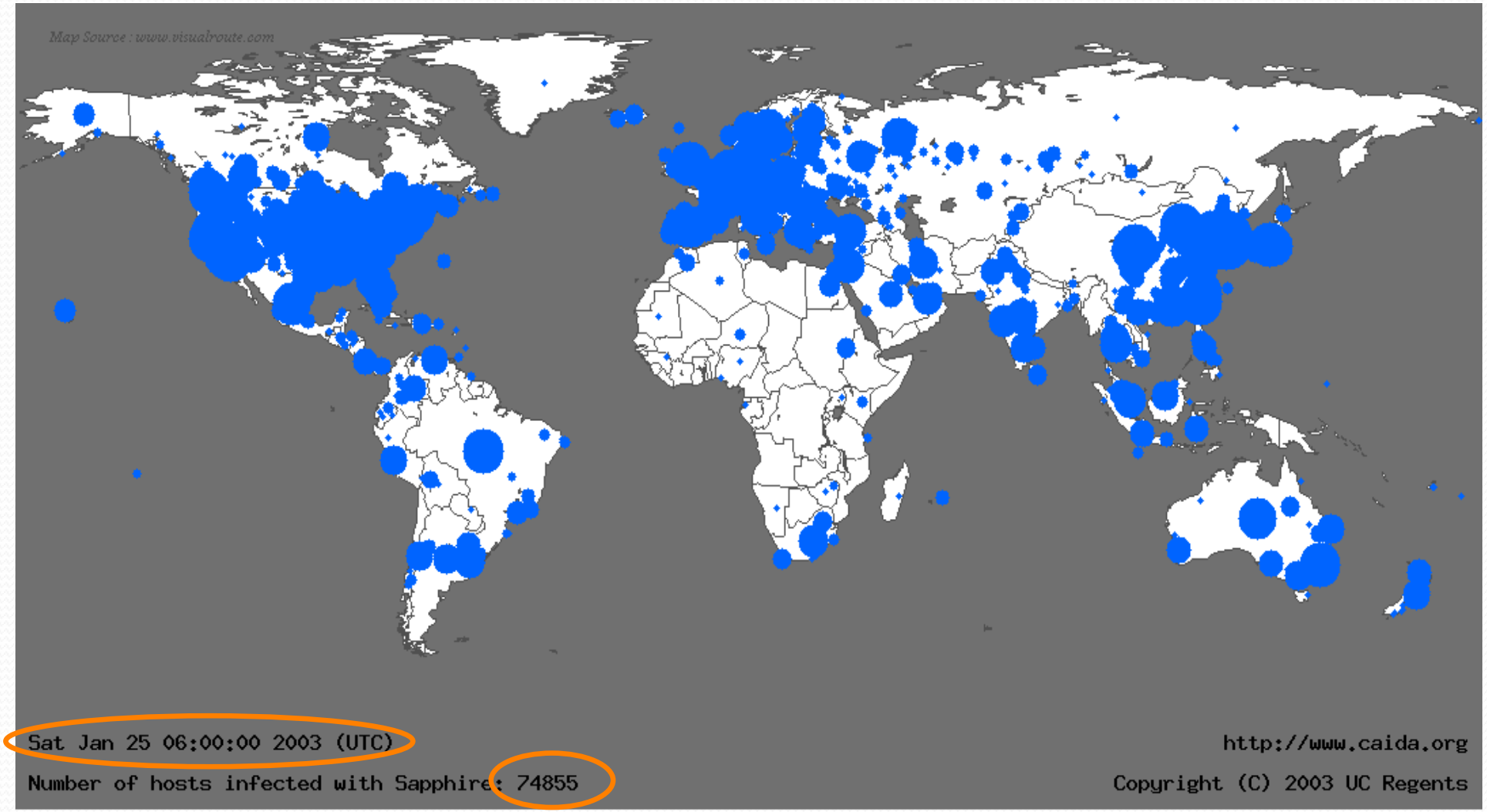

A Lesson in Economy

- Slammer exploited connectionless UDP service, rather than connection-oriented TCP.
- Entire worm fit in a single packet! (376 bytes)
  - When scanning, worm could “fire and forget”.
  - Stateless!
- Worm infected 75,000+ hosts in 10 minutes (despite broken random number generator).
  - At its peak, doubled every 8.5 seconds.
- Progress limited by the Internet’s carrying capacity (= 55 million scans/sec)

Why Security?

- First victim at 12:45 am
- By 1:15 am, transcontinental links starting to fail
- 300,000 access points downed in Portugal
- All cell and Internet in Korea failed (27 million people)
- 5 root name servers were knocked offline
- 911 didn’t respond (Seattle)
- Flights canceled

Witty Worm

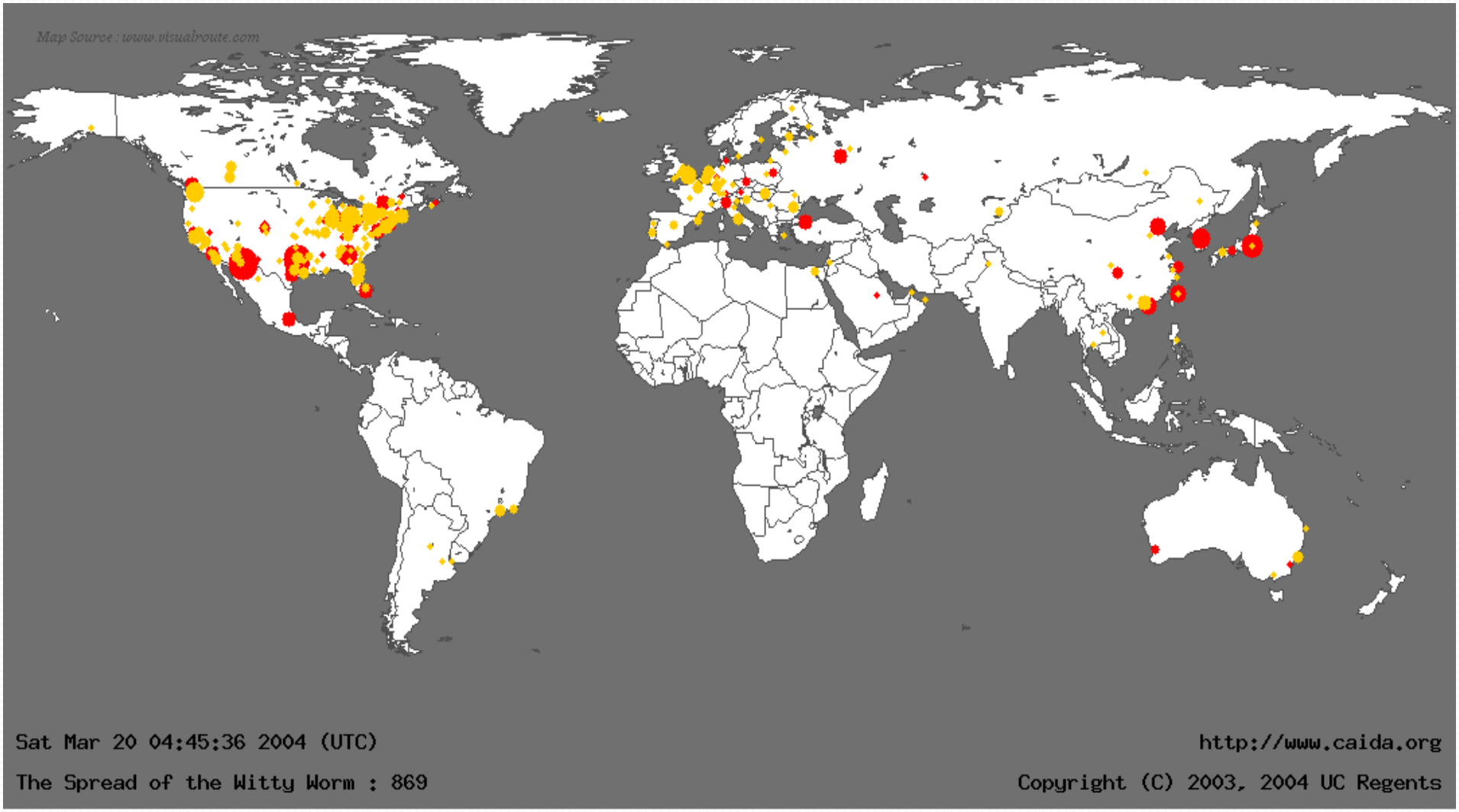
Map Source : www.visualroute.com
Sat Mar 20 04:45:36 2004 (UTC)
The Spread of the Witty Worm : 869
http://www.caida.org
Copyright (C) 2003, 2004 UC Regents

Witty Worm – Cont'd

- Attacks firewalls and security products (ISS)
- First to use vulnerabilities in security software
- ISS announced a vulnerability
  - buffer overflow problem
  - Attack in just one day!
- Attack started from a small number of compromised machines
- In 30 minutes 12,000 infected machines
  - 90 Gb/s of UDP traffic

Detecting Attacks

- How can we identify and measure attacks like Witty and Slammer?

Network Telescope

- Large piece of globally announced IP addresses
- No legitimate hosts (almost)
- Inbound traffic is almost always anomalous
- 1/256th of the all IPv4 space
  - One packet in every 256 packets if unbiased random generators used.
- Provides global view of the spread of Internet worms.

- **Question**. Can this system identify attacks in real time?

Today

- Network Security Goals
- Security vs. Internet Design
- Attacks
- Defenses

Network Security Goals

- Availability
  - Everyone can reach all network resources all the time
- Protection
  - Protect users from interactions they don't want
- Authenticity
  - Know who you are speaking with
- Data Integrity
  - Protect data en-route
- Privacy
  - Protect private data

Today

- Network Security Goals
- Security vs. Internet Design
- Attacks
- Defenses

Internet Design

- Destination routing
- Packet based (statistical multiplexing)
- Global addressing (IP addresses)
- Simple to join (as infrastructure)
- Power in end hosts (end-to-end argument)
- “Ad hoc” naming system

Internet Design vs. Security

- Destination routing
  - Keeps forwarding tables small
  - Simple to maintain forwarding tables
  - How do we know where packets are coming from?
    - Probably simple fix to spoofing, why isn't it in place?
- Packet based (statistical multiplexing)
- Global addressing (IP addresses)
- Simple to join (as infrastructure)
- Power in end hosts (end-to-end argument)
- "Ad hoc" naming system

Internet Design vs. Security

- Destination Routing
- Packet Based (statistical multiplexing)
  - Simple + Efficient
  - Difficult resource bound per-communication
    - How to keep someone from hogging?
      (remember, we can't rely on source addresses)
- Global Addressing (IP addresses)
- Simple to join (as infrastructure)
- Power in End Hosts (end-to-end argument)
- "Ad hoc" naming system

Internet Design vs. Security

- Destination routing
- Packet based (statistical multiplexing)
- Global Addressing (IP addresses)
  - Very democratic
  - Even people who don't necessarily want to be talked to
    - "every psychopath is your next door neighbor" – Dan Geer
- Simple to join (as infrastructure)
- Power in end hosts (end-to-end argument)
- "Ad hoc" naming system

Internet Design vs. Security

- Destination routing
- Packet based (statistical multiplexing)
- Global addressing (IP addresses)
- Simple to join (as infrastructure)
  - Very democratic
  - Misbehaving routers can do very bad things
    - No model of trust between routers
- Power in End Hosts (end-to-end argument)
- "Ad hoc" naming system

Internet Design vs. Security

- Destination routing
- Packet based (statistical multiplexing)
- Global addressing (IP addresses)
- Simple to join (as infrastructure)
- Power in end-hosts (end-to-end argument)
  - Decouple hosts and infrastructure = innovation at the edge!
  - Giving power to least trusted actors
    - How to guarantee good behavior?
- "Ad hoc" naming system

Internet Design vs. Security

- Packet Based (statistical multiplexing)
- Destination Routing
- Global Addressing (IP addresses)
- Simple to join (as infrastructure)
- Power in End Hosts (end-to-end argument)
- "Ad hoc" naming system
  - Seems to work OK
  - Fate sharing with hierarchical system
  - Off route = more trusted elements

Today

- Network Security Goals
- Security vs. Internet Design
- Attacks
  - How attacks leverage these weaknesses in practice
    - Denial of service
    - Indirection
    - Reconnaissance
- Defenses

DoS: Via Resource Exhaustion

CPU

User-time

Uplink bandwidth

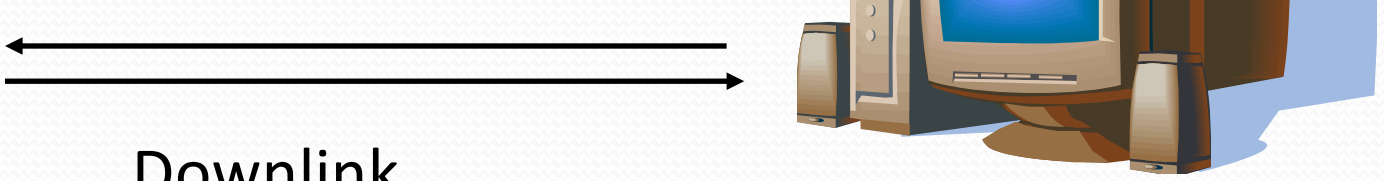

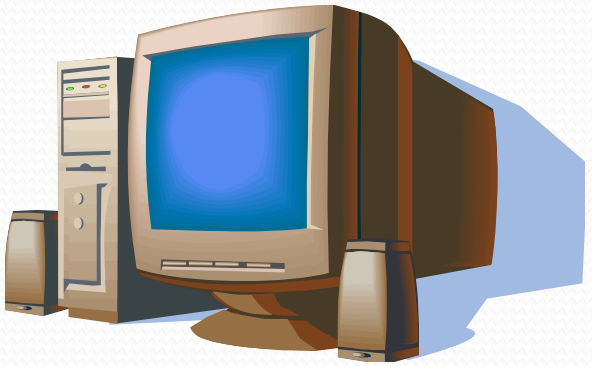

Downlink bandwidth

Memory (e.g. TCP TCB exhaustion)

DoS: Via Resource Exhaustion

- Uplink bandwidth
  - Saturate uplink bandwidth using legitimate requests (e.g. download large image)
  - Solution: use a CDN (Akamai)
  - Solution: admission control at the server (not a network problem??)
- CPU time similar to above
- Victim Memory
  - TCP connections require state, can try to exhaust
  - E.g. SYN Flood (next few slides)

Who Is Responsible?

- Can we rely on the attack victim to stop DoS attacks?
- If not, who can do this?
- How?
- Which resource is cheaper?
  - Bandwidth, or
  - CPU

TCP Handshake

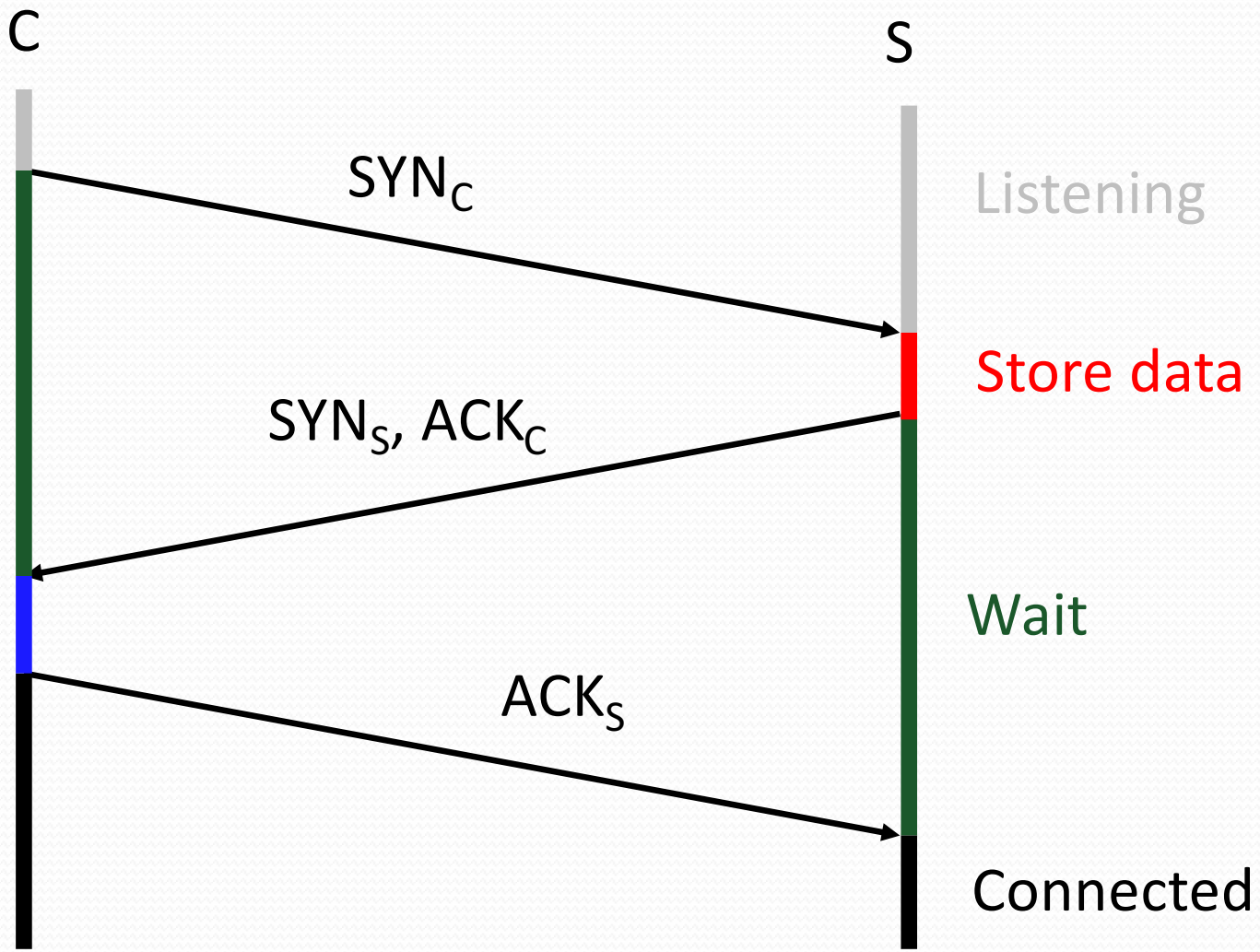

Example: SYN Flooding

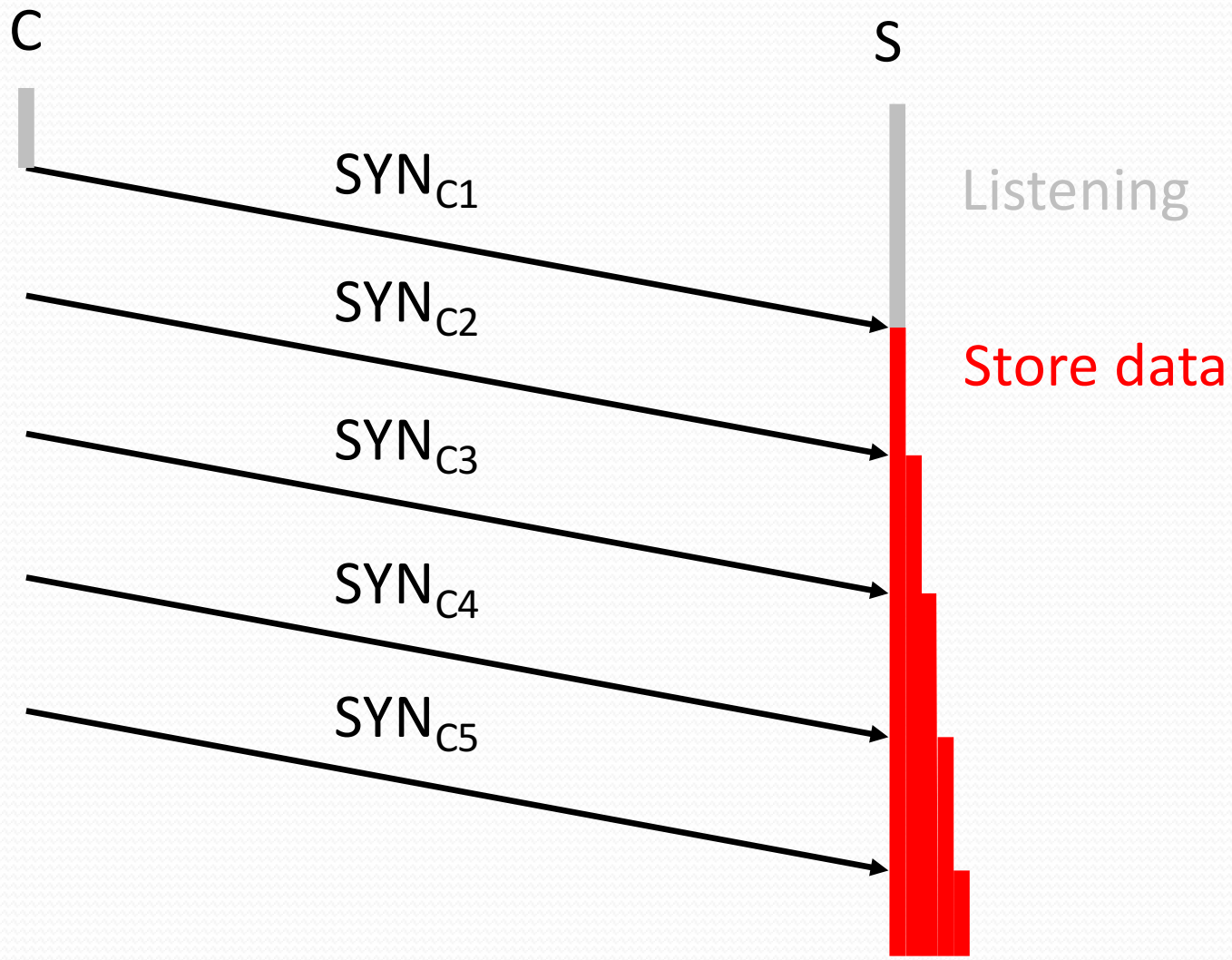

Protection against SYN Attacks [Bernstein, Schenk]

- SYN Cookies
  - Client sends SYN
  - Server responds to Client with SYN-ACK cookie
    - sqn = f(src addr, src port, dest addr, dest port, rand)
    - Server does not save state
  - Honest client responds with ACK(sqn)
  - Server checks response
    - If matches SYN-ACK, establishes connection
- Drop Random TCB in SYN_RCVD state (likely to be attackers)

Distributed DoS (DDoS)

- Attacker compromises multiple hosts
- Installs malicious program to do her biding (bots)
- Bots flood (or otherwise attack) victims on command; Attack is coordinated
- Bot-networks of 80k to 100k have been seen in the wild
  - Aggregate bandwidth > 20Gbps (probably more)
- E.g. Blue Frog (by Blue Security)

Blue Frog

- Anti-spam tool:
  - Persuade spammers to remove community members' addresses from their mailing list
- Users register: Do Not Intrude Registry, Firefox, and IE plugins
- Automatic reports: ISPs, law-enforcement, …
- Spammers attacked
  - Intimidating e-mails
  - DDoS attack to "Blue Security" web page
  - Redirected to blogs.com → Collapse
  - Attackers identified
- Blue Security ceased its anti-spam operation.

What About Downlink? (Flooding)

- Assume attacker generates enough traffic to saturate downlink bandwidth.
- What can the server do?
- What can the network do?
  - Ideally want network to drop bad packets
  - How to tell if a packet is part of a legitimate flow? (requires per flow state?)
  - Even harder, how to tell if a SYN packet is part of a legitimate request?
- Is the phone network immune to such attacks?

DoS Aplenty

- Attacker guesses TCP seq. number for an existing connection:
  - Attacker can send Reset packet to close connection. Results in DoS.
  - Most systems allow for a large window of acceptable seq. #'s
  - Only have to a land a packet in
  - Attack is most effective against long lived connections, e.g. BGP.
- Congestion control DoS attack

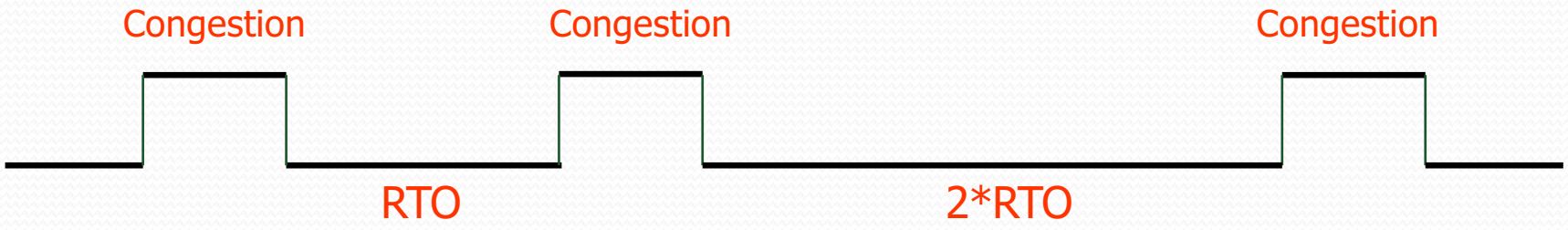

  - Generate TCP flow to force target to repeatedly enter retransmission timeout state
  - Difficult to detect because packet rate is low

Indirection Attacks

- Rely on connecting to “end-points” to get content/access services
- Unfortunately network end-points (e.g. IPs, DNS names) are loosely bound
- Long history of problems

Example: Fetching a Web Page

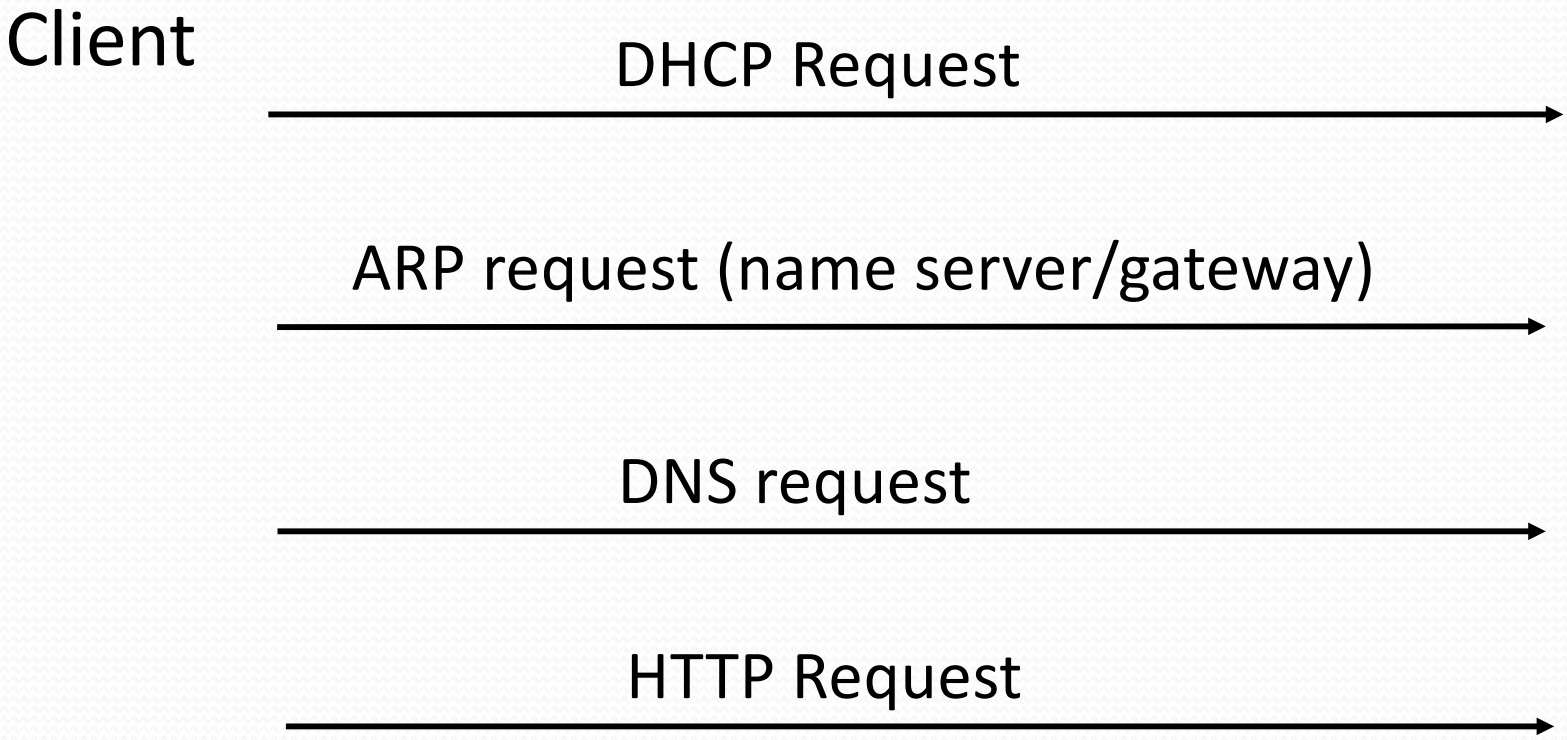

DNS Vulnerability

- Users/hosts typically trust the host-address mapping provided by DNS

Bellovin/Mockapetris Attack

- Trust relationships use symbolic addresses
  - /etc/hosts.equiv contains friend.stanford.edu
- Requests come with numeric source address
  - Use reverse DNS to find symbolic name
  - Decide access based on /etc/hosts.equiv, …
- Attack
  - Spoof reverse DNS to make host trust attacker

Reverse DNS

- Given numeric IP address, find symbolic addr

- To find 222.33.44.3,
  - Query 44.33.222.in-addr.arpa
  - Get list of symbolic addresses, e.g.,

```
1    IN    PTR    server.small.com
2    IN    PTR    boss.small.com
3    IN    PTR    ws1.small.com
4    IN    PTR    ws2.small.com
```

Attack

- Gain control of DNS service for evil.org
- Select target machine in good.net
- Find trust relationships
  - SNMP, finger can help find active sessions, etc.
  - Example: target trusts host1.good.net
- Connect
  - Attempt rlogin from coyote.evil.org
  - Target contacts reverse DNS server with IP addr
  - Use modified reverse DNS to say
    "addr belongs to host1.good.net"
  - Target allows rlogin

DNS Rebinding Attacks

- Modern browsers implement the same-origin policy.
  - Isolate distinct origins.
- To attack:
  - Subvert the same-origin policy
  - Confuse browser to aggregate network resources.
- DNS Rebinding Attacks:
  - register a domain, e.g. attacker.com
  - Answer DNS queries for attacker.com with your IP, short TTL, serve malicious JavaScript
  - Script requests IP address of attacker.com, feed the IP of private server
  - Read private information

Protecting Browsers from DNS Rebinding Attacks, In Proceedings of ACM CCS 07

Solution – DNS Pinning

- Once a hostname is resolved to an IP address, cache the result for a while
  - Regardless of TTL

- Plug-ins can cause problems

TCP Connection Spoofing

- Each TCP connection has an associated state
  - Client IP and port number; same for server
  - Sequence numbers for client, server flows

- Problem
  - Easy to guess state
    - Port numbers are standard
    - Sequence numbers (used to be) chosen in predictable way

IP Spoofing Attack

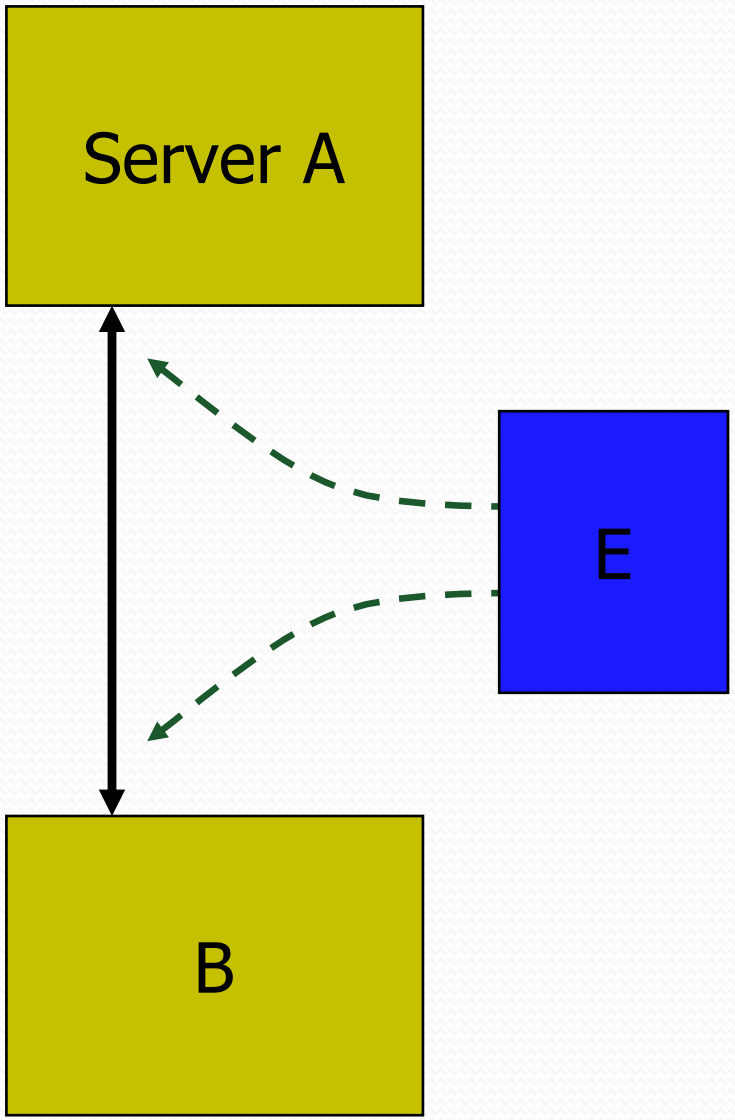

- A, B trusted connection
  - Send packets with predictable seq numbers
- E impersonates B to A
  - Opens connection to A to get initial seq number
  - SYN-floods B's queue
  - Sends packets to A that resemble B's transmission
  - E cannot receive, but may execute commands on A
- Other ways to spoof source IP?

Reconnaissance/Misc

- To attack a victim, first discover available resources
- Many commonly used reconnaissance techniques
  - Port scanning
  - Host/application fingerprinting
  - Traceroute
  - DNS (reverse DNS scanning, Zone transfer)
  - SNMP
- These are meant for use by admins to diagnose network problems!
  - Trade-off between the ability to diagnose a network and reveal security sensitive information

Anecdotes …

- Large bot networks exist that scan the Internet daily looking for vulnerable hosts
  (at least 16,000 participating hosts)
- Old worms still endemic on Internet (e.g. Code Red)
  - Seem to come and go in mass
  - Surreptitious scanning effort?

Today

- Network Security Goals
- Security vs. Internet Design
- Attacks
- Defenses

Firewalls

- Keep out unwanted traffic
- Can be done in the network (e.g. network perimeter) or at the host
- Many mechanisms
  - Packet filters
  - Stateful packet filters
  - Proxies, gateways

Packet Filters

- Make a decision to drop a packet based on packet header
  - Protocol type
  - Transport ports
  - Source/Dest IP address
  - Etc.
- Usually done on router at perimeter of network
- And on virtually all end-hosts today

Packet Filters: Problem

- Assume firewall rule
  (allow from port 53 and port 80)
- Easy for an attacker to send packets from port 53 or 80
- Further attacker can forge source
- Not very effective for stopping packets from unwanted senders

Stateful Packet Filter

- Idea: Only allow traffic initiated by client
  - For each flow request (e.g. SYN or DNS req) keep a little state
  - Ensure packets received from Internet belong to an existing flow
  - To be effective must keep around sequence numbers per flow
- Very common, used in all NAT boxes today
  - Stateful NATs downside: failure → all connection state is lost!

Proxies

- Want to look “deeper” into packets
  - Application type
  - Content
- Can do by reconstructing TCP flows and “peering” in, however this is really hard
  - (Digression next slide)

Passive Reconstruction of TCP Stream

- Use passive network element to reconstruct TCP streams
- “Peer” into stream to find harmful payload (e.g. virus signatures)
- Why is this really hard?

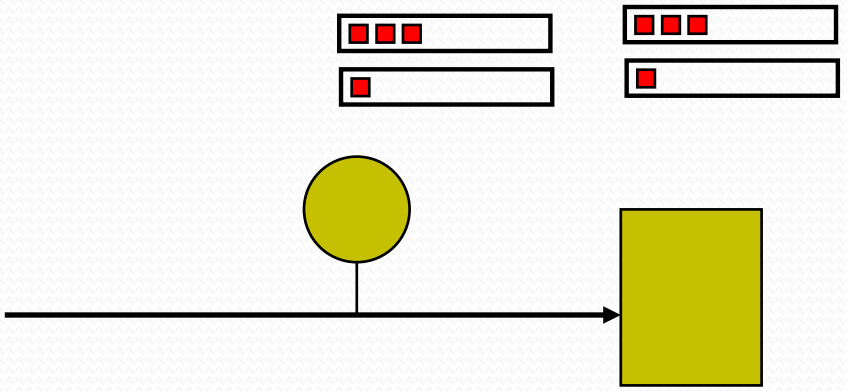

Reconstructing Streams

- Must know the client's view of data
  - Have to know if packet reaches destination (may not if TTL is too short)
  - Have to know how end-host manages overlapping TCP sequence numbers
  - Have to know how end-host manages overlapping fragments

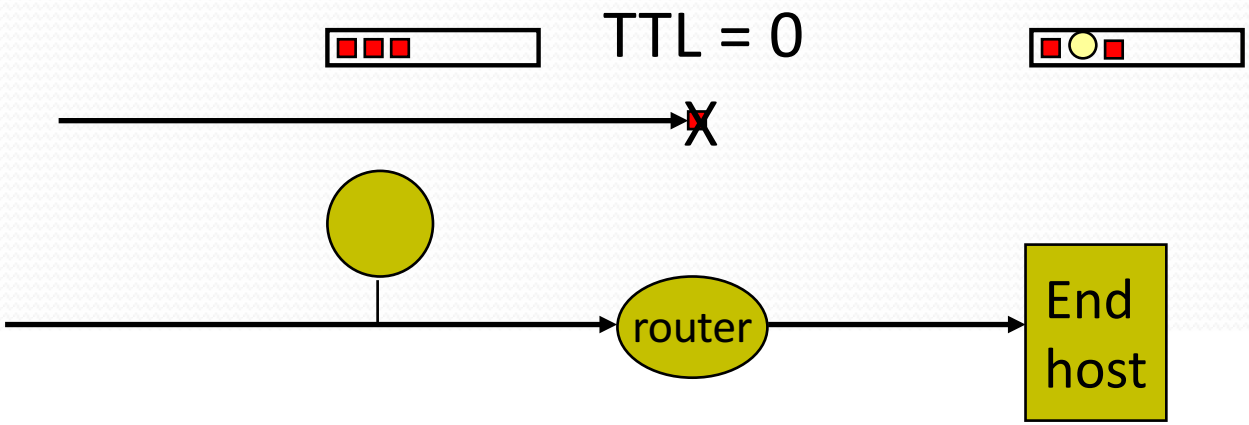

Proxies

- Full TCP termination in the network
- Often done transparently (e.g. HTTP proxies)
- Allows access to objects passed over network
  - E.g. files, streams etc.
- Does not have same problems as stream reconstruction
- Plus can do lots of other fun things
  - E.g. content caching

Proxy Discussion

- Proxies duplicate per-flow state held by clients
- How does this break end-to-end semantics of TCP?
  - E.g. what if proxy crashes right after reading from client? (lost data!)
- How to fix?
  - Lots of work in this area

Final Comments

- Internet not designed for security
- Many, many attacks
  - Defense is very difficult
  - Attackers are smart; Broken network aids them!
- Retrofitting solutions often break original design principles
  - Some of these solutions work, some of the time
  - Some make the network inflexible, brittle
- Time for new designs/principles?

Final Review

- Final exam logistics
- Review of principles
- Where next?

Final Exam Logistics

- When: Monday December 14th, 9AM-12PM
- Location: please check course web site

- Examination aids allowed:
  - Non-programmable calculators
  - 1 double-sided page of notes

- *No cell phones allowed*

Final Exam

- Part I – Multiple choice
  - 1 correct answer for each question
- Part II – Comparisons
  - 4-5 sentences each
- Part III – Longer Questions
  - Might need more time than Part I & II
  - Still very simple problems
  - Similar to midterm and problem sets

Final Review

- Final exam logistics
- Review of principles
- Where next?

Review of Basic Concepts

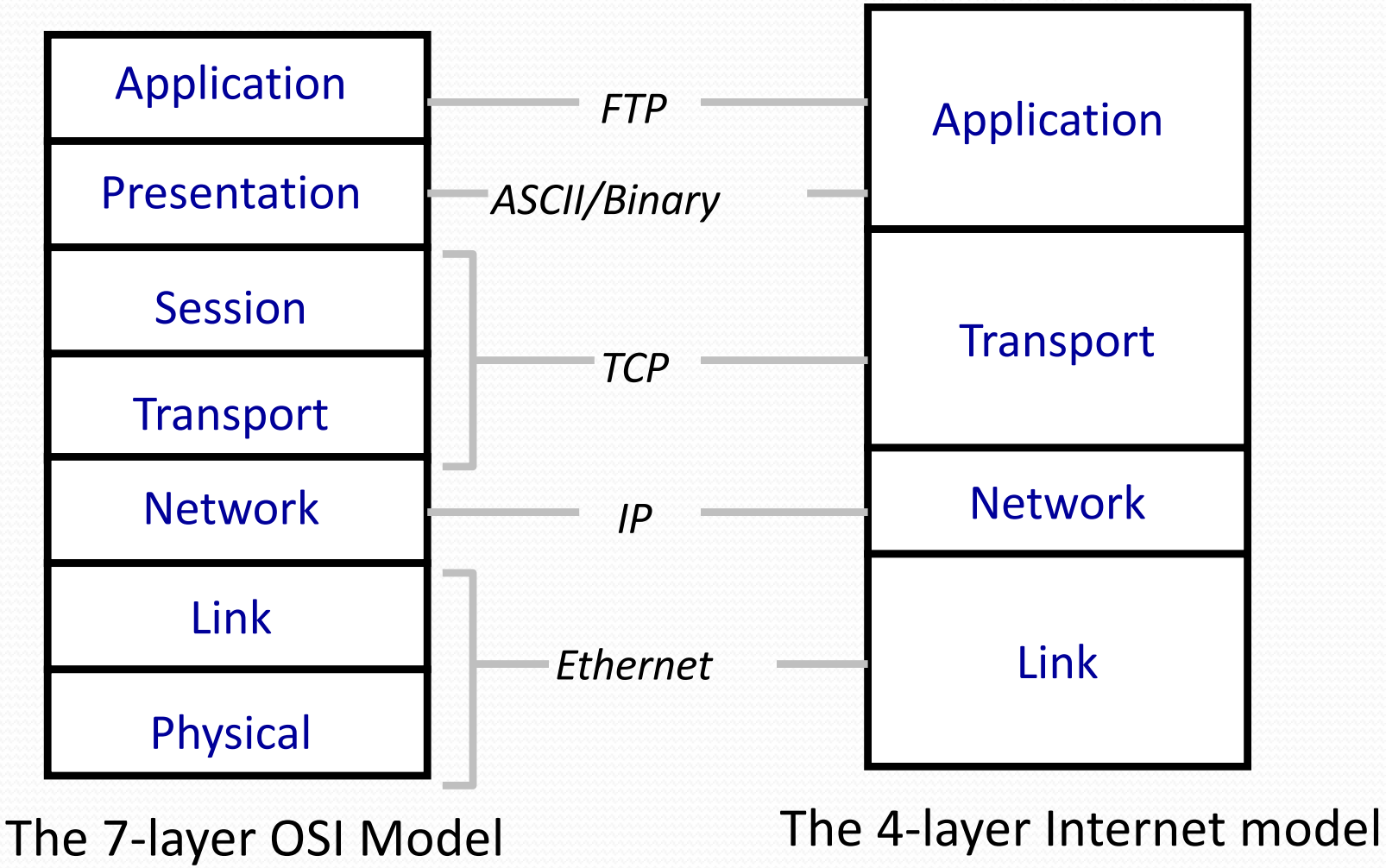

The 7-layer OSI Model

The 4-layer Internet model

Example: FTP over the Internet Using TCP/IP and Ethernet

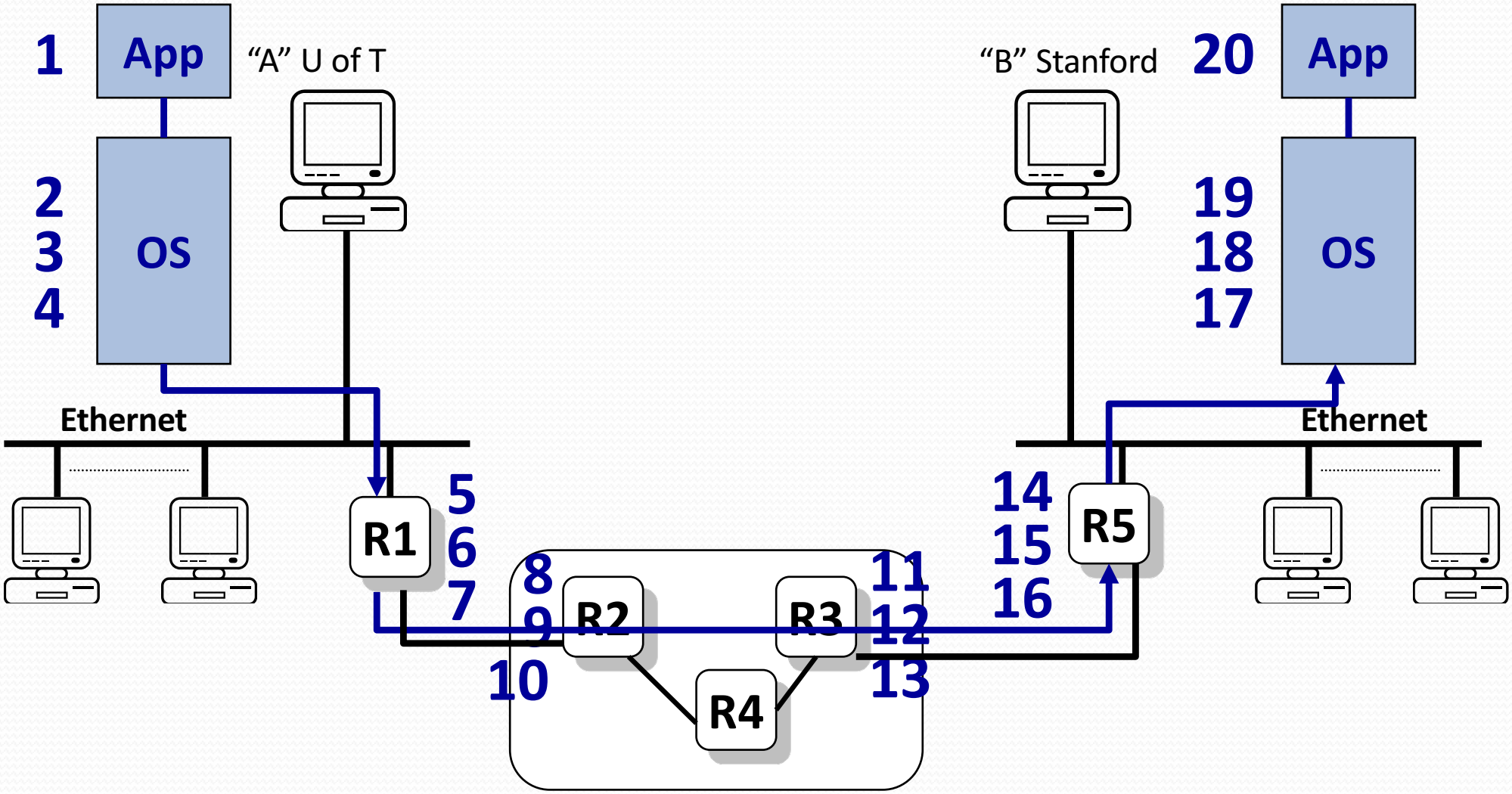

Review of Basic Principles

- Basic ideas:
  - Packet switching, statistical multiplexing, layering,
- Link Layer:
  - Channel capacity, encoding and clock recovery, error detection/correction, Ethernet switching
- Network Layer:
  - Fragmentation, Bellman-Ford, Dijkstra, addresses and lookups, BGP, IGP

Review of Basic Principles – Cont'd

- Transport Layer:
  - Flow control, congestion control, retransmissions and sliding windows, congestion avoidance (RED)
- Miscellaneous:
  - Queuing mechanisms, middleboxes, peer-to-peer, software-defined networking, and network security

Final Review

- Final exam logistics
- Review of principles
- Where next?

Where Next?

- Courses to take:
  - CSC2203: Packet Switch & Network Architectures
  - CSC2229: Software-Defined Networking
  - CSC309: Programming on the Web
  - CSC2231: Special Topics in Computer Systems
    - Online Social Networking Systems
    - Internet Systems and Services
  - CSC2206: Systems Modeling and Analysis
  - CSC2221: Theory of Distributed Computing
  - CSC2415: Advanced Topics in Distributed Computing
  - CSC2720: Systems Thinking for Global Problems
- Individual study courses
  - CSC494 and CSC495

Thank You!