Functional Programming—
Illustrated in Scheme

References:

- Dybvig, (available online and in the library) Mitchell Chapter 3, 4.2.

Lisp slides © D. Horton 2000.
Scheme slides © S. Stevenson, D. Inkpen 2001.
Adapted for Scheme © E. Joanis 2000, 2002.
Modified and updated © S. McIlraith 2004.
Additional slides use material taken from © G. Baumgartner 2001.

Jumping right in

A Scheme procedure

```
(define increment
    (lambda (n)
        (+ n 1)
    )
)
```

or

```
(define (increment n)
    (+ n 1)
)
```

A call to the procedure

```
(increment 21)
```

The Spirit of Lisp-like Languages

> We shall first define a class of **symbolic expressions** in terms of ordered pairs and lists. Then we shall define five elementary **functions and predicates**, and build from them by **composition**, **conditional expressions** and **recursive definitions** an extensive class of functions of which we shall give a number of examples. We shall then show how these **functions can themselves be expressed as symbolic expressions**, and we shall give a **universal function** *apply* that allows us to compute from the expressions for a given function its value for given arguments. Finally, we shall define some **functions with functions as arguments** and give some useful examples.

McCarthy, J, [1960]. Recursive functions of symbolic expressions and their computation by machine, Part I. *Comm. ACM* 3:4; quoted in Sethi.

Pure Functional Languages

Fundamental concept: **application** of (mathematical) **functions** to **values**

1. **Referential transparency:** The value of a function application is independent of the contex t in which it occurs
   - value of `f(a,b,c)` depends only on the values of `f`, `a`, `b` and `c`
   - It does not depend on the global state of computation

   $\Rightarrow$ all vars in function must be parameters

Pure Functional Languages (cont.)

2. The concept of assignment is **not** part of functional programming
   - no explicit assignment statements
   - variables bound to values only through the association of actual parameters to formal parameters in function calls
   - function calls have no side effects
   - thus no need to consider global state

3. Control flow is governed by function calls and conditional expressions
   $\Rightarrow$ no iteration
   $\Rightarrow$ recursion is widely used

Pure Functional Languages (cont.)

4. All storage management is implicit
   - needs garbage collection

5. Functions are *First Class Values*
   - Can be returned as the value of an expression
   - Can be passed as an argument
   - Can be put in a data structure as a value

   - Unnamed functions exist as values

A Functional Program

A program includes:

1. A set of function definitions
2. An expression to be evaluated

E.g. in Scheme:

```
1 ]=> (define (abs-val x)
        (if (>= x 0)
           x
           (- x)))

;Value: abs-val

1 ]=> (abs-val (- 3 5))

;Value: 2
```


Jumping Back In

The MIT Scheme Interface

```
werewolf 1% scheme
Scheme Microcode Version ...

1 ]=> (+ 8 3 5 16 9)
;Value: 41

1 ]=> (define increment (lambda (n) (+ n 1)))
;Value: increment

1 ]=> (increment 21)
;Value: 22

1 ]=> (load "incr")
;Loading "incr.scm" -- done
;Value: increment-list

1 ]=> (increment-list (1 32 7))
;The object 1 is not applicable.
;To continue, call RESTART with an option number:
; (RESTART 2) => Specify a procedure to use in its place.
; (RESTART 1) => Return to read-eval-print level 1.

2 error> (restart 1)
;Abort!

1 ]=> (increment-list '(1 32 7))
;Value 1: (2 33 8)
```

```
1 ]=> (trace increment-list)
;Unspecified return value

1 ]=> (increment-list '(1 32 7))

[Entering #[compound-procedure 2 increment-list]
    Args: (1 32 7)]
[Entering #[compound-procedure 2 increment-list]
    Args: (32 7)]
[Entering #[compound-procedure 2 increment-list]
    Args: (7)]
[Entering #[compound-procedure 2 increment-list]
    Args: ()]
[()
      <== #[compound-procedure 2 increment-list]
    Args: ()]
[(8)
      <== #[compound-procedure 2 increment-list]
    Args: (7)]
[(33 8)
      <== #[compound-procedure 2 increment-list]
    Args: (32 7)]
[(2 33 8)
      <== #[compound-procedure 2 increment-list]
    Args: (1 32 7)]
;Value 3: (2 33 8)

1 ]=> (exit)

Kill Scheme (y or n)? Yes
Happy Happy Joy Joy.
werewolf 2%
```


Formal Roots: λ-Calculus

- Defined by Alonzo Church, a logician, in 1930s as a computational theory of recursive functions
- λ-calculus is equivalent in computational power to Turing machines
- Recall: what's a Turing machine?
  Turing machines are abstract machines that emphasize computation as a series of state transitions driven by symbols on an input tape (which leads naturally to an imperative style of programming based on assignment)
- How is λ-calculus different?
  - λ-calculus emphasizes typed expressions and functions (which naturally leads to a functional style of programming).
  - No state transitions.

λ-Calculus (cont.)

λ-calculus is a formal system for defining recursive functions and their properties.

- Expressions are called λ-expressions.
- Every λ-expression denotes a function.
- A λ-expression consists of 3 kinds of terms:
  Variables: x, y, z etc
  V denotes arbitrary variables
  Abstractions: $\lambda V.E$
  where V is some variable and E is another λ-term.
  Applications: $(E1\ E2)$ where $E1$ and $E2$ are λ-terms. Applications are sometimes called combinations.

λ-Calculus (cont.)

Formal Syntax in BNF

```
<λ-term> ::=  <variable>
            |  λ<variable> . <λ-term>
            |  (<λ-term> <λ-term>)


<variable> ::=  x |  y |  z |  ...
```

Or more compactly

```
E ::=  V  |  λV.E  |  (E1   E2)
V ::=  x  |  y  |  z  |  ...
```

Where `V` is an arbitrary variable and `E` is an arbitrary λ-expression. We call λ`V` the **head** of the λ-expressions and `E` the **body**.

λ-Calculus: Functional Forms

A higher-order function (functional form):
- Takes functions as parameters
- Yields a function as a result

E.g.: Given

```
f(x) = x + 2 ,      g(x) = 3 * x
```

then,

```
h(x) = f(g(x)) and
h(x) = (3 * x) + 2
```

`h(x)` is called a **higher-order function**.

Types of Functional Forms:

Construction form: E.g.,

```
g(x) = x * x, h(x) = 2 * x, i(x) = x / 2
[g,h,i] (4) = (16,8,2)
```

Apply-to-all form: E.g,

```
h(x) = x * x
y(h, (2,3,4)) = (4,9,16)
```


λ-Calculus Is it really Turing Complete?

Can we represent the class of Turing computable functions?

Yes, we can represent:
- Boolean and conditional functions
- Numerical and arithmetic functions
- Data structures: ordered pairs, lists, etc.
- Recursion

But, doing so in λ-calculus is tedious;

- Need syntactic sugar to simplify task,
- λ-calculus more suitable as an abstract model of a programming language rather than a practical programming language.

Both Turing machines and λ-calculus are idealized, mathematical models of computation.

Scheme: A Functional Programming Language

1958: Lisp
1975: Scheme (revised over the years)
1980: Common Lisp ("CL")
1980s: Lisp Machines (e.g, Symbolics, TI Explorer, etc.)

Lisp, Scheme and CL contrasted on following pages.

Some features of Scheme:

- denotational semantics based on the λ-calculus.

I.e., the meaning of programming constructs in the language is defined in terms of mathematical functions.

- lexical scoping

I.e., all free variables in a λ-expression are assigned values at the time that the $\lambda$is defined (i.e., evaluated and returned).

- arbitrary ctrl structures w/ *continuations*.
- functions as first-class values
- automatic garbage collection.

LISP

- Functional language developed by John McCarthy in 1958.
- Semantics based on λ-*Calculus*
- All functions operate on lists or atomic symbols: (called "S-expressions")
- Only five basic functions: list functions `cons`, `car`, `cdr`, `equal`, `atom` and one conditional construct: `cond`
- Uses dynamic scoping
- Useful for list-processing applications
- Programs and data have the same syntactic form: S-expressions
- Used in Artificial Intelligence

SCHEME

- Developed in 1975 by G. Sussman and G. Steele
- A version of LISP
- Consistent syntax, small language
- Closer to initial semantics of LISP
- Provides basic list processing tools
- Allows functions to be first class objects
- Provides support for *lazy evaluation*
- lexical scoping of variables

COMMON LISP (CL)

- Implementations of LISP did not completely adhere to semantics
- Semantics redefined to match implementations
- COMMON LISP has become the standard
- Committee-designed language (1980s) to unify LISP variants
- Many defined functions
- Simple syntax, large language

Expressions

Common structure for both procedures and data. In Scheme, functions are called *procedures*.

When an expression is evaluated it creates a value or list of values that can be embedded into other expressions. Therefore programs can be written to manipulate other programs.

```
<expression> --> <variable>
     | <literal>
     | <procedure call>
     | <lambda expression>
     | <conditional>
     | <assignment>
     | <derived expression>
```

E.g.,

`#t` (true)

`()` (false)

`(a b c)`

`(a (b c) d)`

`((a b c) (d e (f)))`

`(1 (b) 2)`

`(+ '1 2)`

Procedure Application

The main form of a Scheme expression is the procedure application. (Terminology: in Scheme, the official name for what you would think of as a function is *procedure*.)

`(procedure arg1 arg2 ... argn)`

Evaluation

- Each argument is evaluated.
- The procedure is applied to the results.

Exception: **syntactic forms**.

Syntactic forms violate the rule—they are built in to the language to handle cases the rule above can't handle. Examples: `define, if, cond, lambda---more on this later.`

Examples

- `(- 1) => -1`
- `(* 5 7) => 35`
- `(+ 1 2 (* 2 3)) => 9`
- `(+ (- 6 3) (/ 10 2) 2 (* 2 3)) => 16`
- `(cos 0) => -1`

Exercice: run Scheme and try the arithmetic operators with 0, 1, 2 and 3 arguments, and figure out how the results make sense.

Variables

To bind a name to a value:

```
(define var value)
```

```
(define a 2)
=> a
a
=> 2
(+ a 2)
=> 4
(define b 3)
=> b
(define c (+ a (* 4 b)))
=> c              ; LISP: Lots of Silly Parentheses
c
=> 14
```

Could define be a procedure?

Built-In Procedures

- `eq?`: identity on atoms
- `null?`: is list empty?
- `car`: selects first element of list
- `cdr`: selects rest of list
- `(cons element list)`: constructs lists by adding `element` to front of `list`
- `quote` or `'`: produces constants

Built-In Procedures

- `'()` is the empty list
- `(car '(a b c))` =
- `(car '((a) b (c d)))` =
- `(cdr '(a b c))` =
- `(cdr '((a) b (c d)))` =

- `car` and `cdr` can break up any list:
  - `(car (cdr (cdr '((a) b (c d))))) =`
  - `(caddr '((a) b (c d)))`
- `cons` can construct any list:
  - `(cons 'a '()) =`
  - `(cons 'd '(e)) =`
  - `(cons '(a b) '(c d)) =`
  - `(cons '(a b c) '((a) b)) =`

Lists

A simple but powerful general-purpose datatype.
(How many datatypes have we seen so far?)

```
(1 #t 1)
()
(1 (2 3) ())
```

Building block: the cons cell.

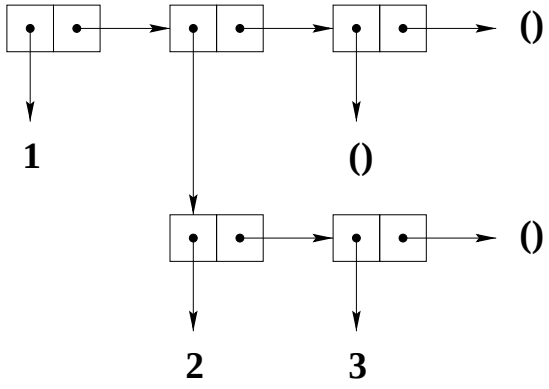

Note: Sometimes you'll see NIL. This is LISP notation! In Scheme, we use `()`.

More about lists

Proper lists:

```
(), (a (b (c) d) e)

(cons 'a '(b)) → (a b)
```

Dotted pairs (improper lists):

```
(cons 'a 'b) → (a . b)

(car '(a . b)) → a

(cdr '(a . b)) → b

(cons a '(b . c)) → (a b . c)

(a b c) → (a . (b . (c . ())))
```


Things you should know about cons, pairs and lists

The *pair* or *cons cell* is the most fundamental of Scheme's structured object types.

A **list** is a sequence of **pairs**; each pair's cdr is the next pair in the sequence.

The cdr of the last pair in a **proper list** is the empty list. Otherwise the sequence of pairs forms an **improper list**. I.e., an empty list is a proper list, and and any pair whose cdr is a proper list is a proper list.

An improper list is printed in **dotted-pair notation** with a period (dot) preceding the final element of the list. A pair whose cdr is not a list is often called a **dotted pair**

`cons` **vs.** `list`**:** The procedure `cons` actually builds *pairs*, and there is no reason that the cdr of a pair must be a list, as illustrated on the previous page.

The procedure `list` is similar to `cons`, except that it takes an arbitrary number of arguments and always builds a proper list.

E.g., `(list 'a 'b 'c)` → `(a b c)`

Other (Predicate) Procedures

Predicate procedures return #t or () (i.e., false).

- `+ - * /` numeric operators, e.g.,
  `(+ 5 3)` = 8, `(- 5 3)` = 2
  `(* 5 3)` = 15, `(/ 5 3)` = 1.6666666
- `= < > <= >=` number comparison ops
- Run-time type checking procedures:
  - All return Boolean values: `#t` and `()`
  - `(number? 5)` is `#t`
  - `(zero? 0)` is `#t`
  - `(symbol? 'sam)` is `#t`
  - `(list? '(a b))` is `#t`
  - `(null? '())` is `#t`

Other Predicate Procedures

- `(number? 'sam)` evaluates to `()`
- `(null? '(a))` evaluates to `()`
- `(zero? (- 3 3))` evaluates to `#t`
- `(zero? '(- 3 3))` ⇒ type error
- `(list? (+ 3 4))` evaluates to `()`
- `(list? '(+ 3 4))` evaluates to `#t`