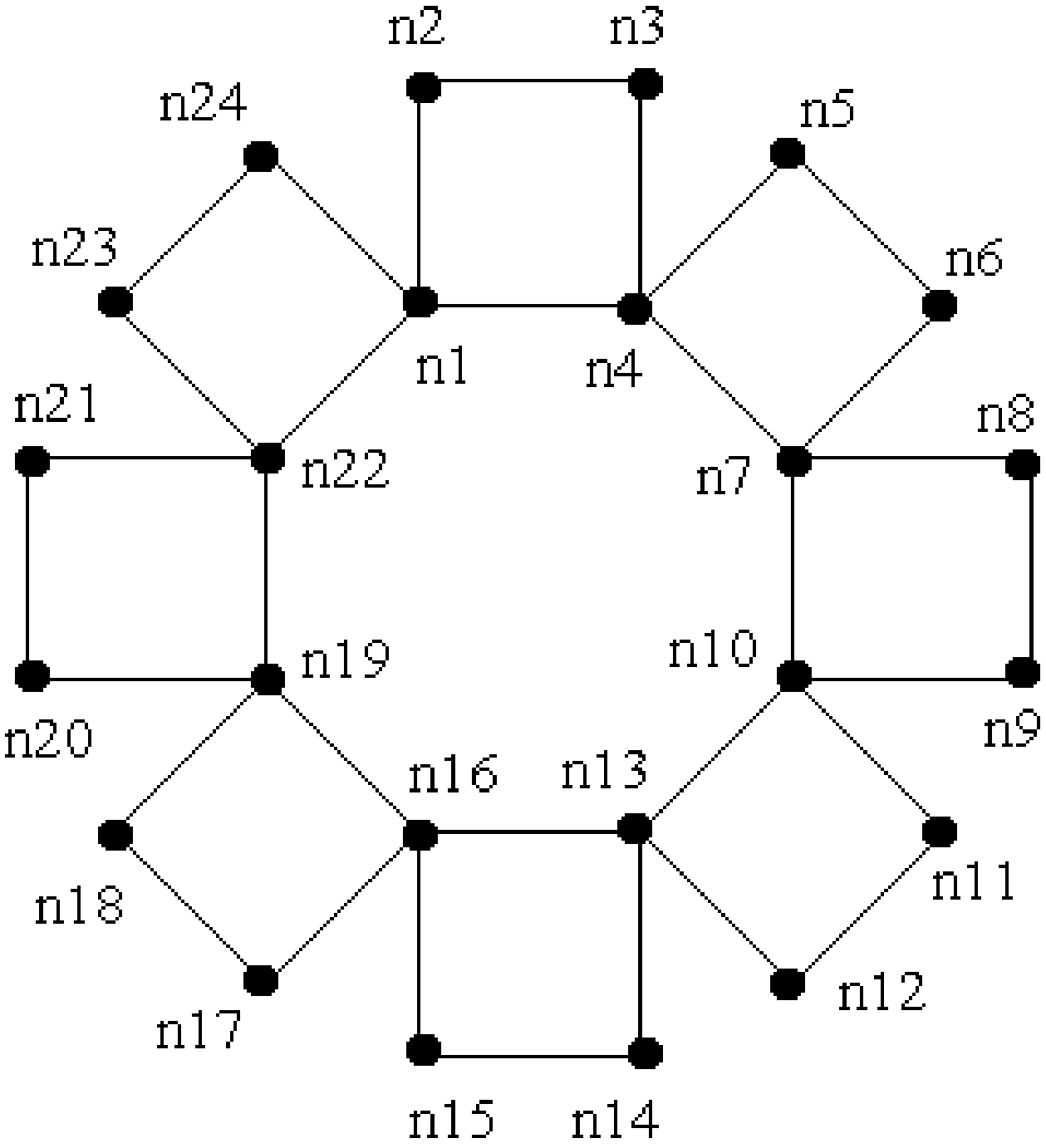
n2
n3
n24
n5
n23
n6
n1
n4
n21
n8
n22
n7
n19
n10
n20
n9
n16
n13
n18
n11
n17
n12
n15
n14